THIS DOCUMENT HAS BEEN DIGITALLY SIGNED AND SEALED BY:

Carter Bearden
2020.06.29 10:23:14-05'00'

PRINTED COPIES OF THIS DOCUMENT ARE NOT CONSIDERED SIGNED AND SEALED. THE SIGNATURE MUST BE VERIFIED ON THE ELECTRONIC DOCUMENTS.

COMPANY NAME HDR
ADDRESS 750 OLD HICKORY BLVD.
BLDG. 1, SUITE 200
CITY, STATE BRENTWOOD, TN 37027
PE NAME, P.E. NO. CARTER D. BEARDEN, 111941

THE ABOVE NAMED PROFESSIONAL ENGINEER SHALL BE RESPONSIBLE FOR THE FOLLOWING SHEETS IN ACCORDANCE OF TENN. CODE ANN. §62-2-306.

SHEET NAME	SHEET NO.
SIGNATURE SHEET	STRUCTURE-SIGN1
TITLE SHEET	1
ESTIMATED QUANTITIES	2
GENERAL NOTES	3
PROJECT COMMITMENTS	4
TRAFFIC CONTROL PLANS	5 – 32
BRIDGE PLANS	BR-130-684 THRU 695

YEAR	PROJECT NO.	SHEET NO.
2020	19009-4191-04	STRUCTURE-SIGN1

STATE OF TENNESSEE
DEPARTMENT OF TRANSPORTATION

SIGNATURE SHEET

$$$$SYTIME$$$$$
$$$DGNSPEC$$$

STATE OF TENNESSEE
DEPARTMENT OF TRANSPORTATION
BUREAU OF ENGINEERING

DAVIDSON COUNTY

BRIDGE NO. 19-I0065-07.27 OVER WEDGEWOOD AVE
(FEDERAL ID: 19I00650029)

BRIDGE REPAIR

INTERSTATE 65 F.A.H.S. NO.

TENN.	YEAR	SHEET NO.
	2020	1
FED. AID PROJ. NO.		
STATE PROJ. NO.	19009-4191-04	

Index Of Sheets

STANDARD ROADWAY DRAWINGS

ROADWAY DESIGN STANDARDS

DWG NO.	REVISION	DESCRIPTION
RD-A-1	02-20-20	STANDARD ABBREVIATIONS A THROUGH L
RD-A-2		STANDARD ABBREVIATIONS M THROUGH Z
RD-L-1	02-20-20	STANDARD LEGEND

DESIGN - TRAFFIC CONTROL

DWG NO.	REVISION	DESCRIPTION
T-M-1	06-28-19	DETAILS OF PAVEMENT MARKINGS FOR CONVENTIONAL ROADS AND MARKING ABBREVIATIONS
T-M-2	06-28-19	DETAILS OF PAVEMENT MARKINGS FOR CONVENTIONAL ROADS
T-WZ-10	04-02-12	ADVANCED ROAD WORK SIGNING ON HIGHWAYS AND FREEWAYS
T-WZ-12	05-01-20	ONE LANE CLOSURE DETAIL FOR BRIDGES ON DIVIDED HIGHWAYS
T-WZ-13	05-01-20	TWO-OUTSIDE LANE CLOSURE FOR EXPRESSWAYS AND FREEWAYS
T-WZ-14	05-01-20	TWO-OUTSIDE LANE CLOSURE FOR INTERSTATES AND EXPRESSWAYS
T-WZ-16	06-28-19	LANE SHIFT FOR DIVIDED HIGHWAYS AND FREEWAYS
T-WZ-18	05-01-20	SHOULDER CLOSURE DETAIL FOR FREEWAYS AND DIVIDED HIGHWAYS
T-WZ-FAB1		FLASHING YELLOW ARROW BOARD
T-WZ-PBR1		INTERCONNECTED PORTABLE BARRIER RAIL
T-WZ-PBR2	02-28-20	DETAILS FOR WORK ZONE CHANNELIZATION DEVICES

LIST OF STANDARD DRAWINGS

DWG NO.	REVISION	DESCRIPTION
STD-1-3SS	11-01-10	STANDARD SINGLE SLOPE CONCRETE MEDIAN BARRIER

SPECIAL PROVISIONS

SP NO.	REVISION	DESCRIPTION
SP108B		
SP712PTQ	10-09-17	TRAFFIC QUEUE PROTECTION

PROJECT LOCATION

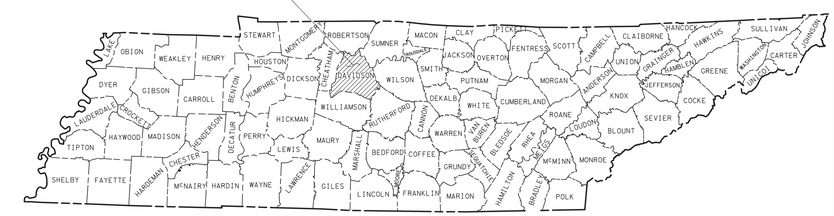

SCALE: 1" = 1 MILE

PROJECT NO. 19009-4191-04

BRIDGE NO. 19-I0065-07.27

BRIDGE DRAWINGS

DWG. NO.	DRAWING
BR-130-684	LAYOUT OF BRIDGE TO BE REPAIRED
BR-130-685	ESTIMATED QUANTITIES
BR-130-686	GENERAL NOTES
BR-130-687	EXISTING TYPICAL SECTION
BR-130-688	WEEKEND 1 TYPICAL SECTION
BR-130-689	WEEKEND 2 TYPICAL SECTION
BR-130-690	WEEKEND 3 TYPICAL SECTION
BR-130-691	FINAL TYPICAL SECTION
BR-130-692	MEDIAN REPAIR DETAILS
BR-130-693	CANTILEVER REPAIR DETAILS
BR-130-694	BACKWALL REPAIR DETAILS
BR-130-695	GENERAL REPAIR DETAILS

SEALED BY

CARTER D. BEARDEN
STATE OF TENNESSEE
06/26/20

APPROVED: Paul D. Degges
PAUL D. DEGGES, CHIEF ENGINEER

DATE

APPROVED: Clay Bright
CLAY BRIGHT, COMMISSIONER

SPECIAL NOTES

PROPOSALS MAY BE REJECTED BY THE COMMISSIONER IF ANY OF THE UNIT PRICES CONTAINED THEREIN ARE OBVIOUSLY UNBALANCED, EITHER EXCESSIVE OR BELOW THE REASONABLE COST ANALYSIS VALUE.

THIS PROJECT TO BE CONSTRUCTED UNDER THE STANDARD SPECIFICATIONS OF THE TENNESSEE DEPARTMENT OF TRANSPORTATION DATED JANUARY 1, 2015 AND ADDITIONAL SPECIFICATIONS AND SPECIAL PROVISIONS CONTAINED IN THE PLANS AND IN THE PROPOSAL CONTRACT.

TDOT C.E. MANAGER I OR
TDOT DESIGN MANAGER I MIKE LAWSON

DESIGNER HDR

DESIGNER EVAN GRAVES

CHECKED BY CARTER BEARDEN

P.E. NO. 19009-4191-04

PIN 130235.00

LAND DISTURBANCE: LESS THAN ONE ACRE

REFERENCE DRAWINGS
(TO BE PRINTED WITH PLANS)

DRAWING NO.	DESCRIPTION
K-82-128 THRU K-82-137, K-82-116, K-82-152, H-5-146, AND K-80-14	EXISTING BRIDGE PLANS

U.S. DEPARTMENT OF TRANSPORTATION
FEDERAL HIGHWAY ADMINISTRATION

APPROVED:

DIVISION ADMINISTRATOR DATE

ESTIMATED BRIDGE QUANTITIES

	ITEM NO.	DESCRIPTION	UNIT	TOTAL QUANTITY
	307-03.08	ASPHALT CONCRETE MIX (PG76-22)(BPMB-HM) GRADING B-M2	TON	553
	403-01	BITUMINOUS MATERIAL FOR TACK COAT (TC)	TON	3
	411-03.10	ACS MIX(PG76-22) GRADING D	TON	164
1	415-01.02	COLD PLANING BITUMINOUS PAVEMENT	S.Y.	602
2	603-02.01	REPAINTING EXISTING STEEL STRUCTURES (END BEARINGS AT ABUT. 1 AND 2)	LS	1
3	604-02.03	EPOXY COATED REINFORCING STEEL	LB.	46916
17 4	603-02.20	SPOT PAINTING EXISTING STEEL STRUCTURES	S.F.	1528
5	604-04.02	APPLIED TEXTURE FINISH (EXISTING STRUCTURES)	S.Y.	644
17 6	604-10.05	CONCRETE	S.F.	2
17 7	604-10.14	REMOVE EXISTING WEARING SURFACE	LS	1
17 8	604-10.30	BRIDGE DECK REPAIRS (FULL DEPTH OF SLAB)	S.Y.	177
17 9	604-10.42	CONCRETE REPAIRS	C.F.	7082
17 8	604-10.50	BRIDGE DECK REPAIRS (PARTIAL DEPTH OF SLAB)	S.Y.	575
17 10	604-10.54	CONCRETE REPAIRS	S.F.	50
11	604-12.15	DRILL AND GROUT STEEL BARS	EACH	812
12	705-20.25	TEMPORARY CRASH CUSHION (MASH TL-3)	EACH	2
13	711-02.06	REINFORCED CONCRETE MEDIAN BARRIER (STD-1-3SS)	L.F.	182
14	712-01	TRAFFIC CONTROL	LS	0.5
17 15	712-02.02	INTERCONNECTED PORTABLE BARRIER RAIL	L.F.	800
17 15	712-04.01	FLEXIBLE DRUMS (CHANNELIZING)	EACH	346
17 15	712-04.50	PORTABLE BARRIER RAIL DELINEATOR	EACH	27
17 15	712-06	SIGNS (CONSTRUCTION)	S.F.	7617
15	712-07.03	TEMPORARY BARRICADES (TYPE III)	L.F.	216
15	712-08.03	ARROW BOARD (TYPE C)	EACH	6
17 16 15	712-08.10	MOBILE MESSAGE SIGN UNIT WITH ATTENUATOR	HOUR	864
	712-09.02	REMOVABLE PAVEMENT MARKING (8" BARRIER LINE)	L.F.	11317
	712-09.08	REMOVABLE PAVEMENT MARKING (6" LINE)	L.F.	2292
18 15	713-16.04	CHANGEABLE MESSAGE SIGN UNIT	EACH	8
14	717-01	MOBILIZATION	LS	0.5

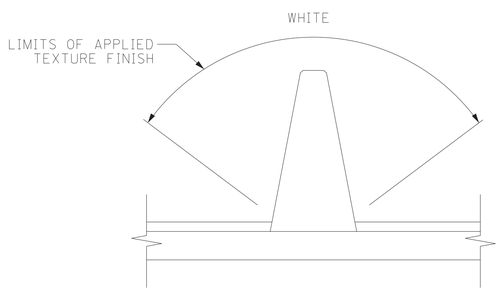

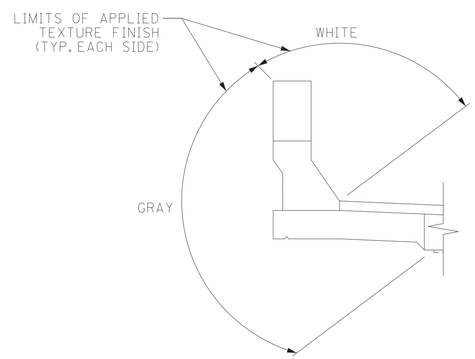

APPLIED TEXTURE FINISH

NOTES:
THE CONTRACTOR SHALL CLEAN ALL SURFACES TO RECEIVE APPLIED TEXTURE COATING. ALL CLEANING SHALL BE SATISFACTORY TO THE ENGINEER PRIOR TO APPLYING THE TEXTURE COATING.

THE APPLIED TEXTURE FINISH SHALL BE EITHER MOUNTAIN GRAY, FEDERAL SPECIFICATION NO. 36440, FEDERAL COLOR STANDARD 595A, OR WHITE, FEDERAL SPECIFICATION NO. 37886. A COLOR SAMPLE SHALL BE SUBMITTED TO THE ENGINEER FOR APPROVAL. A LIST OF APPROVED TEXTURE COATINGS MAY BE OBTAINED FROM THE TENNESSEE DEPARTMENT OF TRANSPORTATION, DIVISION OF MATERIALS AND TESTS.

COSTS ASSOCIATED WITH CLEANING, FURNISHING, AND APPLYING THE TEXTURE COATING AND ALL NECESSARY LABOR AND MATERIALS SHALL BE INCLUDED IN ITEM NO. 604-04.02, APPLIED TEXTURE FINISH (EXISTING STRUCTURES), S.Y.

1. 415-01.02 INCLUDES ALL COSTS ASSOCIATED WITH COLD PLANING EXISTING ASPHALT PAVEMENT ON THE BRIDGE APPROACHES 25 FEET FROM THE BRIDGE ENDS. FOR NOTES AND DETAILS, SEE DWG. NO. BR-130-695.

2. 603-02.01 INCLUDES COST TO CLEAN & PRIME ALL BEARINGS AT ABUTMENT 1 & 2. SEE DWG. NO. BR-130-686 FOR NOTES.

3. 604-02.03 INCLUDES COST OF REINFORCING STEEL REQUIRED FOR THE BACKWALL, PARAPET, GLARE SCREEN, CENTER DECK BAY AND CANTILEVER. ALSO INCLUDES COST TO SUPPLY AND INSTALL MECHANICAL BAR SPLICERS (COUPLERS). FOR DETAILS, SEE DWG. NOS. BR-130-692 THROUGH BR-130-694.

4. 603-02.20 INCLUDES COST TO CLEAN AND PRIME ALL END DIAPHRAGMS AND THE BEAMS FOR 2'-9" FROM BEAM END (ONE FOOT PAST ENCASEMENT) AT BOTH ABUTMENTS. FOR NOTES, SEE DWG. NO. BR-130-686.

5. 604-04.02 INCLUDES ALL COSTS TO APPLY TEXTURE FINISH AS SHOWN IN DETAIL ON THIS SHEET.

6. 604-10.05 INCLUDES ALL COSTS ASSOCIATED WITH SPALL REPAIRS USING HIGH EARLY STRENGTH CONCRETE AT FIELD DESIGNATED LOCATIONS. FOR NOTES AND DETAILS, SEE DWG. NO BR-130-695.

7. 604-10.14 INCLUDES COST OF ALL LABOR AND MATERIALS REQUIRED TO REMOVE AND DISPOSE OF THE EXISTING ASPHALT WEARING SURFACE WITHIN THE LIMITS OF THE BRIDGE (AVG. DEPTH = 6"). MILLING SHOULD BE A RATE OF LESS THAN 60 FT/SEC, WITH NO RIDGES LEFT.

8. 604-10.30, 604-10.50 INCLUDES ALL COST OF LABOR AND MATERIALS NECESSARY TO PERFORM FULL OR PARTIAL DEPTH DECK REPAIR AS SHOWN ON DWG. NO. BR-130-695.

9. 604-10.42 INCLUDES THE COST OF ALL LABOR, EQUIPMENT AND MATERIALS (EXCLUDING REINFORCING STEEL) REQUIRED TO REPAIR AND REPLACE THE EXISTING BACKWALLS, PARAPETS, CENTER DECK BAY, CANTILEVERS, AND THE COST TO REPAIR AND EXTEND THE EXISTING CONCRETE BRIDGE RAILS. ALL WORK FOR THIS PAY ITEM SHALL BE DONE USING HIGH EARLY STRENGTH CONCRETE. THE COST OF REMOVAL AND DISPOSAL OF DESIGNATED PORTIONS OF THE BACKWALL, CANTILEVER, PARAPET, MEDIAN BARRIER & CENTER DECK BAY SHALL BE INCLUDED IN THE PRICE BID. THIS ITEM SHALL INCLUDE CLEANING AND STRAIGHTENING PORTIONS OF EXISTING REINFORCING TO BE INCORPORATED INTO NEW WORK. THE COST TO SAWCUT APPROACH PAVEMENT AND PERFORM ECAVATION FOR CONSTRUCTION OF THE NEW ABUTMENT BACKWALLS SHALL ALSO BE INCLUDED. IN AREAS OF BRIDGE RAIL REPLACEMENT, THE CONTRACTOR SHALL CONTACT STANSELL ELECTRIC TO CUT, SPLICE, AND REPLACE THE BRIDGE LIGHTING CONDUIT AND CONDUCTOR LOCATED IN THE EXISTING BRIDGE RAIL. FOR NOTES AND DETAILS, SEE DWG. NOS. BR-130-692 THROUGH BR-130-694.

10. 604-10.54 INCLUDES ALL COSTS ASSOCIATED WITH SPALL REPAIRS USING POLYMER MODIFIED CEMENTITIOUS PATCHING MATERIAL AT FIELD DESIGNATED LOCATIONS. FOR NOTES AND DETAILS, SEE DWG. NO. BR-130-695.

11. 604-12.15 INCLUDES THE COST OF ALL LABOR AND MATERIALS REQUIRED FOR THE DRILLING AND GROUTING OF REINFORCING BARS. NON-SHRINK, FLOWABLE GROUT TO BE USED FOR THE DRILLING AND GROUTING BARS. FOR NOTES AND DETAILS, SEE DWG NO. BR-130-693 & BR-130-694.

12. 705-20.25 THIS ITEM SHALL BE A PORTABLE ENERGY ABSORBING TERMINAL MEETING THE REQUIREMENTS OF AASHTO MASH FOR TEST LEVEL 3. THE PAY ITEM WILL INCLUDE FURNISHING AND INSTALLING ALL COMPONENTS AS LISTED ON THE MANUFACTURER'S BILL OF MATERIALS.

13. 711-02.06 COST OF TRANSITION FROM EXISTING MEDIAN BARRIER RAIL TO NEW SINGLE SLOPE MEDIAN BARRIER IS INCLUDED IN THE COST OF THE MEDIAN BARRIER RAIL. FOR NOTES, SEE DWG. NO. BR-130-692.

14. THIS PROJECT AND PROJECT PIN 117125.00 ARE BUNDLED TOGETHER AND SHARE THE QUANTITY FOR THIS ITEM.

15. THE COST OF RELOCATING THE LISTED ITEMS DURING TRAFFIC CONTROL PHASES SHALL BE INCLUDED IN THE PRICE FOR THIS ITEM.

16. 712-08.10 VALUE BASED ON ASSUMED 6 TRUCKS USED FOR SIX (6) 24-HOUR DAYS. SEE SPECIAL PROVISION SP712PTQ FOR MORE DETAIL.

17. THE ENGINEER MAY INCREASE OR DECREASE THE QUANTITY FOR THIS ITEM.

18. TO BE PLACED AT THE ENGINEER'S DISCRETION.

CONST. NO. 19009-4191-04

PROJECT NO.	YEAR	SHEET NO.
19009-4191-04	2020	2

REVISIONS

NO.	DATE	BY	BRIEF DESCRIPTION

DESIGNED BY Lane M. Decker DATE 06/01/2020
DRAWN BY Lane M. Decker DATE 06/01/2020
SUPERVISED BY Benjamin E. Graves DATE 06/08/2020
CHECKED BY Carter D. Bearden DATE 06/26/2020

HDR

CARTER D. BEARDEN
STATE OF TENNESSEE
AGRICULTURE
No. 111991
STATE OF TENNESSEE
06/26/20

STATE OF TENNESSEE
DEPARTMENT OF TRANSPORTATION

ESTIMATED QUANTITIES

BRIDGE NO. 19-I0065-7.27
FEDERAL I.D. 19I00650029
I-65 OVER WEDGEWOOD AVE

DAVIDSON COUNTY
2020

BR-130-685

CONST. NO. 19009-4191-04

PROJECT NO.	YEAR	SHEET NO.
19009-4191-04	2020	3

REVISIONS

NO.	DATE	BY	BRIEF DESCRIPTION

GENERAL NOTES

1. SPECIFICATIONS: STANDARD ROAD AND BRIDGE SPECIFICATIONS OF THE TENNESSEE DEPARTMENT OF TRANSPORTATION (JANUARY 1, 2015 EDITION), AND THE 4TH EDITION (2017) AASHTO LRFD BRIDGE CONSTRUCTION SPECIFICATIONS WITH INTERIMS.

2. DESIGN SPECIFICATIONS: 8TH EDITION (2018) AASHTO LRFD BRIDGE DESIGN SPECIFICATIONS WITH INTERIMS, AND THE 2ND EDITION (2011) AASHTO GUIDE SPECIFICATIONS FOR LRFD SEISMIC BRIDGE DESIGN WITH INTERIMS.

3. REINFORCING STEEL: SHALL BE ASTM A615 GRADE 60 UNLESS NOTED OTHERWISE. SEE SECTION 604 AND 907 OF THE STANDARD SPECIFICATIONS.

4. HIGH EARLY STRENGTH CONCRETE: THE MIX IS TO MEET THE REQUIREMENTS OF THE STANDARD SPECIFICATIONS, CLASS "X". THE CEMENT CONTENT SHALL BE A MINIMUM OF 714 LBS. THE WATER-CEMENT RATIO SHALL BE A MAXIMUM OF 0.40. DESIGN AIR CONTENT SHALL BE 6% WITH ±2% ACCEPTANCE RANGE IN THE FIELD. SLUMP SHALL BE 3±1 INCHES. IF USING A TYPE A, F, OR G WATER REDUCER, THE SLUMP SHALL BE MAXIMUM OF 8 INCHES. NO FLY ASH REPLACEMENT WILL BE PERMITTED. THE MINIMUM 28 DAY COMPRESSIVE STRENGTH SHALL BE 3,500 PSI. TRAFFIC SHALL NOT BE PERMITTED ON ANY OF THE REPAIRED AREAS UNTIL TEST SPECIMENS ATTAIN A MINIMUM COMPRESSIVE STRENGTH OF 3,000 PSI.

5. CONCRETE CURING: ALL CONCRETE IN REPAIR AREAS SHALL BE CURED ACCORDING TO THE STANDARD SPECIFICATIONS.

6. DEMOLITION: THE CONTRACTOR SHALL TAKE SPECIAL CARE TO PROTECT ANY PARTS OF THE STRUCTURE THAT ARE NOT TO BE REMOVED SPECIFICALLY. FOR FULL DEPTH SLAB REMOVAL, EXCEPT OVER BEAMS, THE MAXIMUM HAMMER SIZE IS 90 POUND CLASS. FOR PARTIAL DEPTH SLAB REMOVAL AND ANY WORK OVER THE BEAMS, THE MAXIMUM HAMMER SIZE IS 60 POUND CLASS; CHIPPING HAMMERS OF THE 15 POUND CLASS SHALL BE USED TO REMOVE CONCRETE FROM BENEATH ANY REINFORCING STEEL. SAWING OR CUTTING OF THE CONCRETE IS ACCEPTABLE AS LONG AS ANY SPECIFIED PROJECTION OF THE EXISTING REINFORCING STEEL IS MAINTAINED. EXPANSION JOINT REMOVAL SHALL FOLLOW THE SAME RESTRICTIONS AS FULL DEPTH SLAB REMOVAL. ALL DEVICES PROPOSED FOR CONCRETE DEMOLITION SHALL MEET THE APPROVAL OF THE ENGINEER.

7. QUICK-SET PATCHING MATERIAL: QUICK-SET PATCHING MATERIAL SHALL BE A POLYMER MODIFIED CEMENTITIOUS PATCHING MATERIAL. SEE TDOT QUALIFIED PRODUCTS LIST 13.009 POLY MOD CEMENT STRUCT PATCH VERT & OVER FOR ACCEPTABLE PATCHING MATERIALS.

8. SPOT CLEANING AND PRIME: AREAS REQUIRING REPAINTING OF STEEL SHALL BE CLEANED IN ACCORDANCE WITH SECTION 603.05(B.1) OF THE STANDARD SPECIFICATIONS. HAND (SSPC-SP 2) OR POWER (SSPC-SP 3) TOOL CLEANING SHALL REMOVE ALL RUST, SCALE, LOOSE PAINT, AND DIRT. THESE AREAS SHALL BE SPOT PRIMED IMMEDIATELY AFTER CLEANING.

9. GROUTED BARS IN DRILLED HOLES: HORIZONTALLY DRILLED HOLES SHALL BE DRILLED ½" IN DIAMETER LARGER THAN THE BAR, CLEANED, PACKED WITH NON-SHRINK GROUT, AND THE BAR ROTATED (NOT DRIVEN) TO ITS SEAT. VERTICALLY DRILLED HOLES SHALL BE DRILLED ¼" IN DIAMETER LARGER THAN THE BAR, CLEANED, PACKED WITH EPOXY GROUT, AND THE BAR DRIVEN TO ITS SEAT. ALL GROUTING MATERIAL SHALL BE APPROVED BY TDOT MATERIALS AND TESTS.

10. NOTE: MECHANICAL BAR SPLICERS MUST BE ON THE TDOT QUALIFIED PRODUCTS LIST 27. THE BAR SPLICERS SHALL MEET AASHTO LRFD SPECIFICATIONS FOR MECHANICAL CONNECTION. WHEN EPOXY COATING IS REQUIRED, THE EXPOSED THREADS SHALL BE REPAIRED AFTER SPLICING ACCORDING TO SECTION 907 OF THE STANDARD SPECIFICATIONS. THE COST OF FURNISHING THE BAR SPLICERS, (AND EPOXY COATING WHEN REQUIRED) INCLUDING ALL LABOR AND MATERIALS NECESSARY FOR COMPLETE INSTALLATION, SHALL BE INCLUDED IN THE UNIT PRICE BID FOR ITEM NO. 604-02.03.

11. NOTE: SAW CUT MAY BE FULL DEPTH WHERE SPECIFIED, OTHERWISE THE CONTRACTOR SHALL SAW CUT 1 INCH DEEP INTO THE SLAB BEFORE REMOVING CONCRETE. ALL TRANSVERSE REINFORCING STEEL SHALL REMAIN IN PLACE AND BE SPLICED WITH THE NEW REINFORCING. THE CONTRACTOR MAY USE A HYDRAULIC RAM MOUNTED ON A BACKHOE (COMMONLY CALLED A HOE RAM) OR OTHER SIMILAR HEAVY EQUIPMENT FOR CONCRETE REMOVAL.

12. NOTE: THE REINFORCED CONCRETE MEDIAN BARRIER RAIL SHALL BE CONSTRUCTED IN ACCORDANCE WITH THE DETAILS SHOWN ON DRAWING STD-1-3SS AND SHALL BE GIVEN AN APPLIED TEXTURE FINISH. THE COLOR OF THE FINISH SHALL BE WHITE, COLOR NO. 37886, AMS-STD-595A. THE COST OF THE FINISH SHALL BE INCLUDED IN THE LINEAR FOOT PRICE BID FOR THE MEDIAN RAIL.

13. FINISHING CONCRETE SURFACES: CONCRETE FINISHING SHALL BE IN ACCORDANCE WITH SECTION 604.21 OF THE STANDARD SPECIFICATIONS. A CLASS I FINISH FOLLOWED BY AN APPLIED TEXTURE FINISH SHALL BE USED IN LIEU OF A CLASS II FINISH. NO TEXTURE FINISH SHALL BE APPLIED PRIOR TO COMPLETION OF PAVING AND HAULING OPERATIONS AT THE BRIDGE SITE. THE APPLIED TEXTURE FINISH SHALL BE MEASURED AND PAID FOR UNDER ITEM NO. 604-04.02, APPLIED TEXTURE FINISH (EXISTING STRUCTURES), S.Y.

GRADING

ANY AREA THAT IS DISTURBED OUTSIDE LIMITS OF CONSTRUCTION DURING THE LIFE OF THIS PROJECT SHALL BE REPAIRED BY THE CONTRACTOR AT HIS EXPENSE.

GUARDRAIL

THE CONTRACTOR SHALL NOT REMOVE ANY SECTIONS OF EXISTING GUARDRAIL TO REWORK SHOULDERS OR FLATTEN SLOPES UNTIL THE ENGINEER CONCURS IN THE NECESSITY OF REMOVAL DUE TO CONSTRUCTION REQUIREMENTS AND THE APPROPRIATE WARNING DEVICES ARE INSTALLED.

THE PROPOSED GUARDRAIL, INCLUDING ANY ANCHOR SYSTEM, SHALL BE INSTALLED QUICKLY TO MINIMIZE TRAFFIC EXPOSURE TO ANY HAZARD. NO PAYMENT WILL BE MADE FOR A SECTION OF PROPOSED GUARDRAIL, INCLUDING ANCHORS, UNTIL IT IS COMPLETELY IN PLACE.

MISCELLANEOUS

NOTHING IN THE GENERAL NOTES OR SPECIAL PROVISIONS SHALL RELIEVE THE CONTRACTOR FROM HIS RESPONSIBILITIES TOWARD SAFETY AND CONVENIENCE OF THE GENERAL PUBLIC AND THE RESIDENTS ALONG THE PROPOSED CONSTRUCTION AREA.

UTILITY NOTES

THE LOCATIONS OF UTILITIES SHOWN WITHIN THESE PLANS ARE APPROXIMATE ONLY. EXACT LOCATIONS SHALL BE DETERMINED IN THE FIELD BY CONTACTING THE UTILITY COMPANIES INVOLVED.

UNLESS OTHERWISE NOTED, ALL UTILITY ADJUSTMENTS WILL BE PERFORMED BY THE UTILITY OR ITS REPRESENTATIVE. THE CONTRACTOR AND UTILITY OWNERS WILL BE REQUIRED TO COOPERATE WITH EACH OTHER IN ORDER TO EXPEDITE THE WORK REQUIRED BY THIS CONTRACT.

THE CONTRACTOR WILL PROVIDE ALL NECESSARY PROTECTIVE MEASURES TO SAFEGUARD EXISTING UTILITIES FROM DAMAGE DURING CONSTRUCTION OF THIS PROJECT. IN THE EVENT THAT SPECIAL EQUIPMENT IS REQUIRED TO WORK OVER AND AROUND THE UTILITIES, THE CONTRACTOR WILL BE REQUIRED TO FURNISH SUCH EQUIPMENT. THE COST OF PROTECTING UTILITIES FROM DAMAGE AND FURNISHING SPECIAL EQUIPMENT WILL BE INCLUDED IN THE PRICE BID FOR OTHER ITEMS OF CONSTRUCTION.

PRIOR TO SUBMITTING HIS BID, THE CONTRACTOR WILL BE SOLELY RESPONSIBLE FOR CONTACTING OWNERS OF ALL AFFECTED UTILITIES IN ORDER TO DETERMINE THE EXTENT TO WHICH UTILITY RELOCATIONS AND/OR ADJUSTMENTS WILL HAVE UPON THE SCHEDULE OF THE WORK FOR THE PROJECT. WHILE SOME WORK MAY BE REQUIRED 'AROUND' UTILITY FACILITIES THAT WILL REMAIN IN PLACE, OTHER UTILITY FACILITIES MAY NEED TO BE ADJUSTED CONCURRENTLY WITH THE. CONTRACTOR'S OPERATIONS. ADVANCE CLEAR CUTTING MAY BE REQUIRED BY THE ENGINEER AT ANY LOCATION WHERE CLEARING IS CALLED FOR IN THE SPECIFICATIONS AND CLEAR CUTTING IS NECESSARY FOR A UTILITY RELOCATION. ANY ADDITIONAL COST WILL BE INCLUDED IN THE UNIT PRICE BID FOR THE CLEARING ITEM SPECIFIED IN THE PLANS.

THE CONTRACTOR SHALL NOTIFY EACH INDIVIDUAL OWNER OF HIS PLAN OF OPERATION IN THE AREA OF UTILITIES. PRIOR TO COMMENCING THE WORK, THE CONTRACTOR SHALL CONTACT OWNERS AND REQUEST THEM TO PROPERLY LOCATE THEIR RESPECTIVE UTILITY ON THE GROUND. THIS NOTIFICATION SHALL BE GIVEN AT LEAST THREE (3) BUSINESS DAYS PRIOR TO COMMENCEMENT OF OPERATIONS AROUND THE UTILITY.

SOME UTILITIES CAN BE LOCATED BY CALLING THE TENNESSEE ONE CALL SYSTEM, INC., AT 1-800-351-1111.

UNLESS OTHERWISE NOTED, ALL UTILITY ADJUSTMENTS WILL BE PERFORMED BY THE UTILITY OR ITS REPRESENTATIVE. THE CONTRACTOR AND UTILITY OWNERS WILL BE REQUIRED TO COOPERATE WITH EACH OTHER IN ORDER TO EXPEDITE THE WORK REQUIRED BY THIS CONTRACT. ON CONTRACTS WHERE CONSTRUCTION STAKES, LINES AND GRADES ARE A CONTRACT ITEM, THE CONTRACTOR WILL BE REQUIRED TO PROVIDE RIGHT-OF-WAY OR SLOPE STAKES, DITCH OR STREAM BED GRADES, OR OTHER ESSENTIAL SURVEY STAKING TO PREVENT CONFLICTS WITH THE HIGHWAY CONSTRUCTION. FREQUENTLY THIS WILL BE REQUIRED AS THE FIRST ITEM OF WORK, AND AT ANY LOCATION OF THE PROJECT DIRECTED BY THE ENGINEER.

PAVEMENT MARKINGS

FINAL PAVEMENT MARKINGS

PERMANENT PAVEMENT LINE MARKINGS SHALL BE 4" ENHANCED FLATLINE THERMOPLASTIC INSTALLED TO PERMANENT STANDARDS AT THE END OF EACH DAY'S WORK. SHORT UNMARKED SECTIONS SHALL NOT BE ALLOWED. PAVEMENT MARKINGS WILL BE MEASURED AND PAID FOR UNDER ITEM NO. 716-13.01, ENHANCED FLATLINE THERMO PVMT MRKNG (4IN LINE), L.M. THE CONTRACTOR SHALL HAVE THE OPTION OF USING REFLECTORIZED PAINT INSTALLED TO PERMANENT STANDARDS AT THE END OF EACH DAY'S WORK AND THEN INSTALLING THE PERMANENT MARKINGS AFTER THE PAVING OPERATION IS COMPLETED. THE TEMPORARY MARKINGS FOR THE FINAL SURFACE WILL NOT BE MEASURED AND PAID FOR DIRECTLY, BUT THE COSTS ARE TO BE INCLUDED IN THE PRICE BID FOR THE PERMANENT MARKINGS.

☞SPECIAL NOTE CONCERNING CURING OF NEW CONCRETE PARAPET & MEDIAN BARRIER

THE CONTRACTOR SHALL CURE ALL NEW PARAPETS AND MEDIAN BARRIER AS FOLLOWS: IMMEDIATELY AFTER PLACEMENT OF NEW PARAPET AND MEDIAN BARRIER, PRE-SOAKED WET BURLAP SHALL BE PLACED OVER THE NEW PARAPET. THIS WOULD BE DONE AS SOON AS THE NEW PARAPET AND MEDIAN BARRIER WILL HOLD THE WEIGHT OF THE WET BURLAP AFTER THE SLIP FORM HAS PASSED. A SOAKER HOSE WILL THEN BE PLACED ON TOP OF THE NEW PARAPET AND MEDIAN BARRIER AND PLASTIC BE PLACED OVER THE SOAKER HOSE AND BURLAP. THE NEW PARAPETS AND MEDIAN BARRIER WILL BE CONTINUOUSLY WET CURED FOR APPROXIMATELY 24 HOURS.

STATE OF TENNESSEE
DEPARTMENT OF TRANSPORTATION

GENERAL NOTES

BRIDGE NO. 19-I0065-7.27
FEDERAL I.D. 19I00650029
I-65 OVER WEDGEWOOD AVE

DAVIDSON COUNTY
2020

CARTER D. BEARDEN
REGISTERED ENGINEER
AGRICULTURE
SCHOLAR
No. 110561
STATE OF TENNESSEE
06/26/20

BR-130-686

DESIGNED BY	Lane M. Decker	DATE	06/01/2020
DRAWN BY	Lane M. Decker	DATE	06/01/2020
SUPERVISED BY	Benjamin E. Graves	DATE	06/08/2020
CHECKED BY	Carter D. Bearden	DATE	06/26/2020

HDR

TYPE	YEAR	PROJECT NO.	SHEET NO.
CONST.	2020	19009-4191-04	4

PROJECT COMMITMENTS

COMMITMENT ID	SOURCE DIVISION	DESCRIPTION	STA. / LOCATION
EDHZ001	ENVIRONMENTAL DIVISION, HAZARDOUS MATERIALS	AN ASBESTOS CONTAINING MATERIAL (ACM) SURVEY WAS CONDUCTED ON BRIDGE NO. 19I00650029, I-65 OVER WEDGEWOOD AVE ST, LM 7.27. NO ACM WAS DETECTED AT THE BRIDGE. NO SPECIAL ACCOMMODATIONS FOR DEMOLITION AND WASTE DISPOSAL ARE ANTICIPATED FOR THIS STRUCTURE AND THE MATERIAL CAN BE DEPOSITED IN A C©D LANDFILL. PRIOR TO THE DEMOLITION OR REHABILITATION OF ANY STRUCTURE (BRIDGE OR BUILDING), THE CONTRACTOR IS REQUIRED TO SUBMIT THE NATIONAL EMISSION STANDARDS FOR HAZARDOUS AIR POLLUTANTS STANDARD 10-DAY NOTICE OF DEMOLITION TO THE TDEC DIVISION OF AIR POLLUTION CONTROL (STANDARD SPECIFICATIONS FOR ROAD AND BRIDGE CONSTRUCTION (JANUARY 1, 2015) SECTIONS 107.08 D AND 202.03).	

SEALED BY

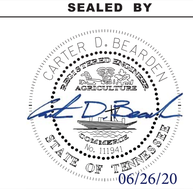

STATE OF TENNESSEE
DEPARTMENT OF TRANSPORTATION

PROJECT COMMITMENTS

TYPE	YEAR	PROJECT NO.	SHEET NO.
CONST.	2020	19009-4191-04	5

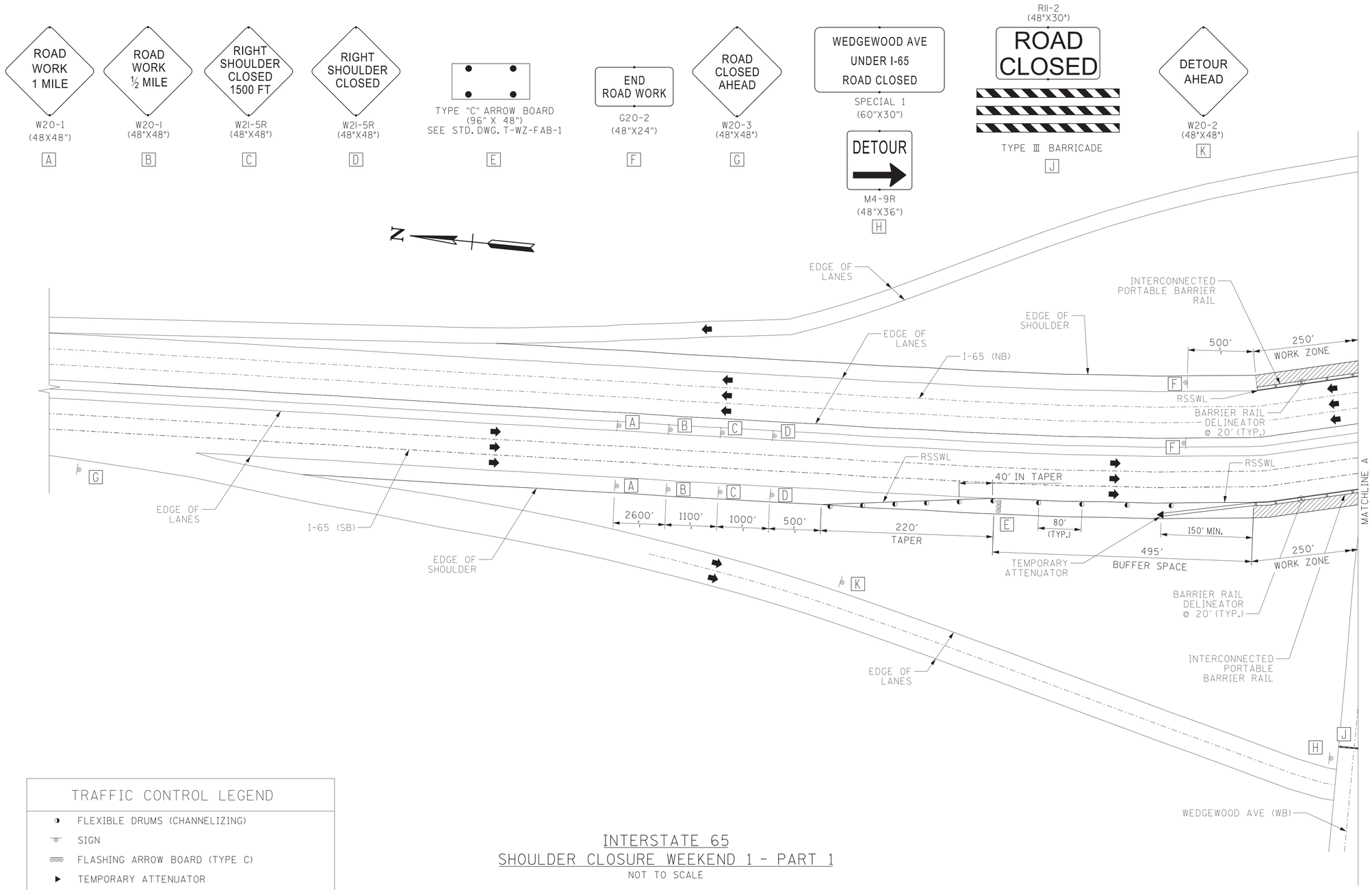

TRAFFIC CONTROL LEGEND

- FLEXIBLE DRUMS (CHANNELIZING)
- SIGN
- FLASHING ARROW BOARD (TYPE C)
- TEMPORARY ATTENUATOR
- RSSWL REMOVABLE SINGLE SOLID WHITE LINE

WORKSPACE

INTERSTATE 65
SHOULDER CLOSURE WEEKEND 1 - PART 1

NOT TO SCALE

SEALED BY

06/26/20

STATE OF TENNESSEE
DEPARTMENT OF TRANSPORTATION

TRAFFIC CONTROL PLANS

TYPE	YEAR	PROJECT NO.	SHEET NO.
CONST.	2020	19009-4191-04	6

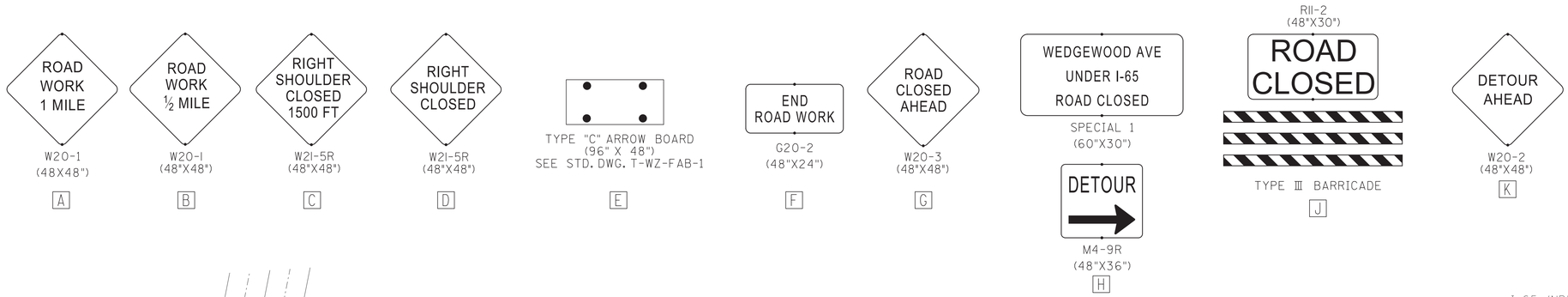

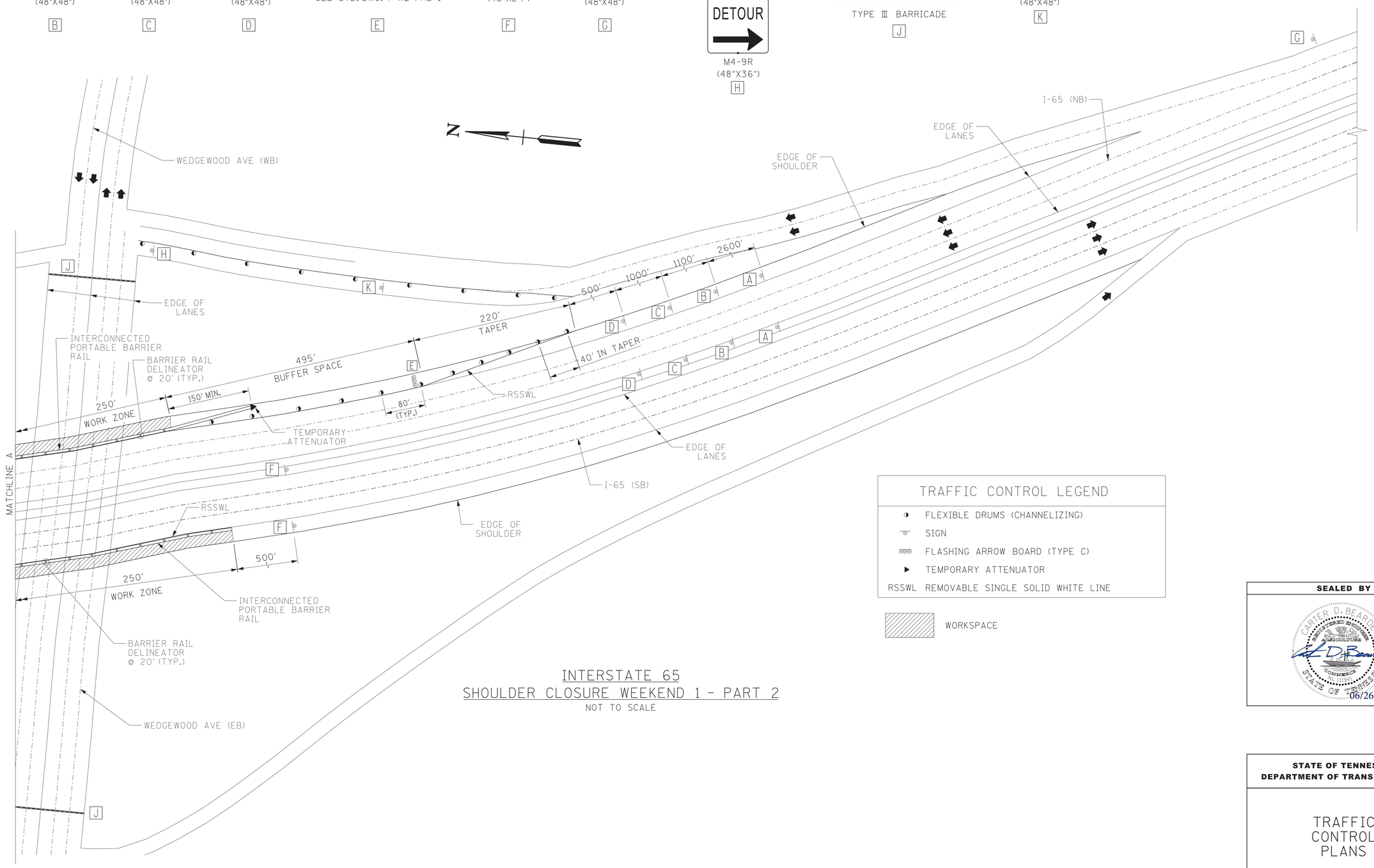

TRAFFIC CONTROL LEGEND

- FLEXIBLE DRUMS (CHANNELIZING)
- SIGN
- FLASHING ARROW BOARD (TYPE C)
- TEMPORARY ATTENUATOR
- RSSWL REMOVABLE SINGLE SOLID WHITE LINE
- WORKSPACE

INTERSTATE 65
SHOULDER CLOSURE WEEKEND 1 - PART 2

NOT TO SCALE

SEALED BY

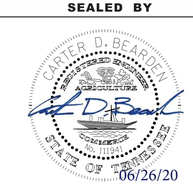

06/26/20

STATE OF TENNESSEE
DEPARTMENT OF TRANSPORTATION

TRAFFIC CONTROL PLANS

TYPE	YEAR	PROJECT NO.	SHEET NO.
CONST.	2020	19009-4191-04	7

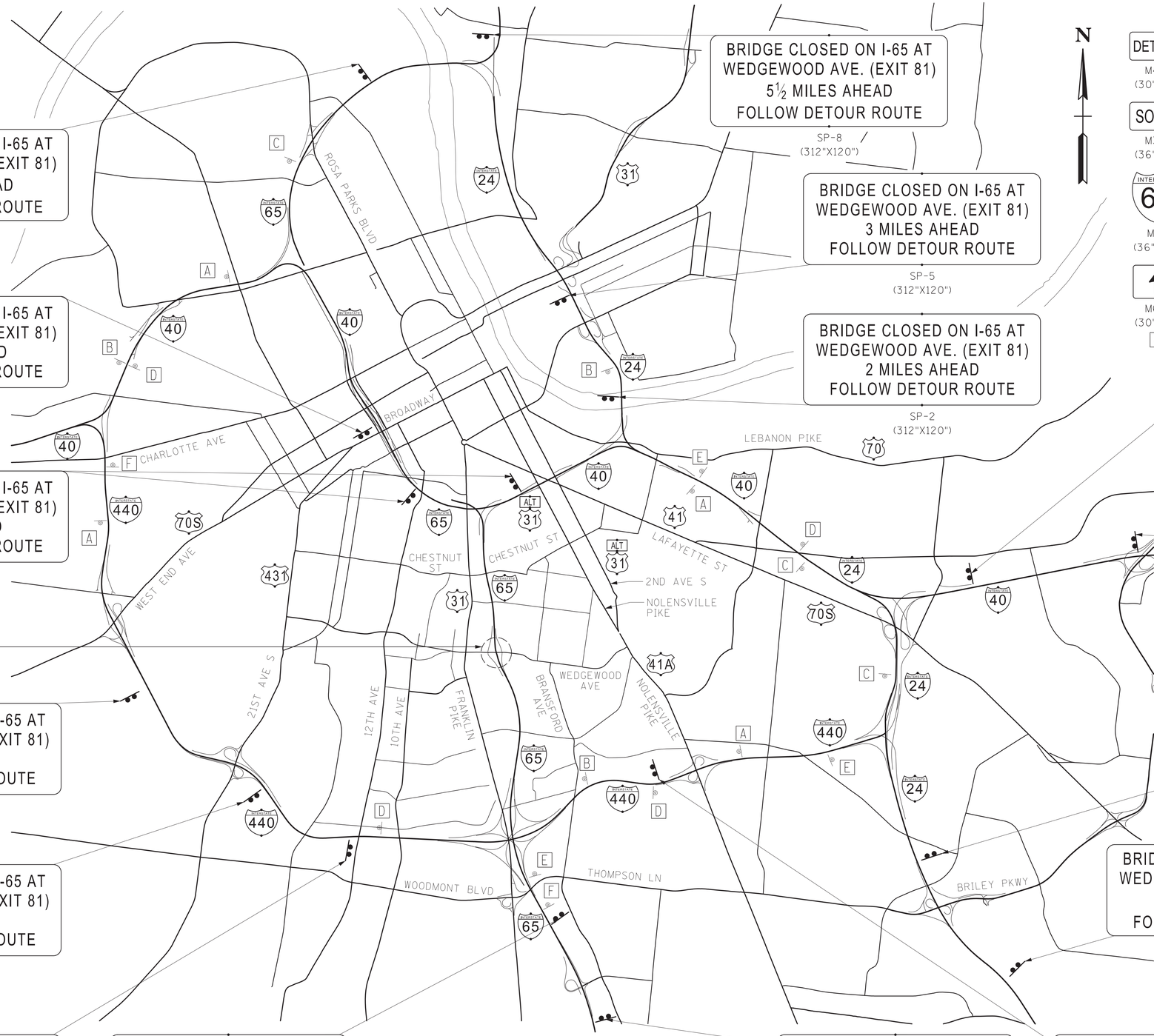

BRIDGE CLOSED ON I-65 AT WEDGEWOOD AVE. (EXIT 81) 4½ MILES AHEAD FOLLOW DETOUR ROUTE
SP-1 (312"X120")

BRIDGE CLOSED ON I-65 AT WEDGEWOOD AVE. (EXIT 81) 2 MILES AHEAD FOLLOW DETOUR ROUTE
SP-2 (312"X120")

BRIDGE CLOSED ON I-65 AT WEDGEWOOD AVE. (EXIT 81) 1 MILE AHEAD FOLLOW DETOUR ROUTE
SP-3 (312"X120")

BRIDGE CLOSED ON I-65 AT WEDGEWOOD AVE. (EXIT 81) 4 MILE AHEAD FOLLOW DETOUR ROUTE
SP-4 (312"X120")

BRIDGE CLOSED ON I-65 AT WEDGEWOOD AVE. (EXIT 81) 3 MILE AHEAD FOLLOW DETOUR ROUTE
SP-5 (312"X120")

BRIDGE CLOSED ON I-65 AT WEDGEWOOD AVE. (EXIT 81) 2 MILE AHEAD FOLLOW DETOUR ROUTE
SP-2 (312"X120")

BRIDGE CLOSED ON I-65 AT WEDGEWOOD AVE. (EXIT 81) 1½ MILE AHEAD FOLLOW DETOUR ROUTE
SP-6 (312"X120")

BRIDGE CLOSED ON I-65 AT WEDGEWOOD AVE. (EXIT 81) 5½ MILES AHEAD FOLLOW DETOUR ROUTE
SP-8 (312"X120")

BRIDGE CLOSED ON I-65 AT WEDGEWOOD AVE. (EXIT 81) 3 MILES AHEAD FOLLOW DETOUR ROUTE
SP-5 (312"X120")

BRIDGE CLOSED ON I-65 AT WEDGEWOOD AVE. (EXIT 81) 2 MILES AHEAD FOLLOW DETOUR ROUTE
SP-2 (312"X120")

BRIDGE CLOSED ON I-65 AT WEDGEWOOD AVE. (EXIT 81) 2½ MILE AHEAD FOLLOW DETOUR ROUTE
SP-7 (312"X120")

BRIDGE CLOSED ON I-65 AT WEDGEWOOD AVE. (EXIT 81) 2 MILE AHEAD FOLLOW DETOUR ROUTE
SP-2 (312"X120")

BRIDGE CLOSED ON I-65 AT WEDGEWOOD AVE. (EXIT 81) 4½ MILE AHEAD FOLLOW DETOUR ROUTE
SP-1 (312"X120")

BRIDGE CLOSED ON I-65 AT WEDGEWOOD AVE. (EXIT 81) 5½ MILES AHEAD FOLLOW DETOUR ROUTE
SP-8 (312"X120")

BRIDGE CLOSED ON I-65 AT WEDGEWOOD AVE. (EXIT 81) 4½ MILES AHEAD FOLLOW DETOUR ROUTE
SP-1 (312"X120")

BRIDGE CLOSED ON I-65 AT WEDGEWOOD AVE. (EXIT 81) 5½ MILE AHEAD FOLLOW DETOUR ROUTE
SP-8 (312"X120")

I-65 DETOUR WEEKEND 2&3
NO SCALE

DETOUR M4-8 (30"X15") | DETOUR M4-8 (30"X15") | DETOUR M4-8 (30"X15")
SOUTH M3-3 (36"X18") | SOUTH M3-3 (36"X18") | SOUTH M3-3 (36"X18")
INTERSTATE 65 M1-1 (36"X36") | INTERSTATE 65 M1-1 (36"X36") | INTERSTATE 65 M1-1 (36"X36")
M6-3 (30"X21") A | M6-2L (30"X21") B | M6-2R (30"X21") C

DETOUR M4-8 (30"X15") | DETOUR M4-8 (30"X15")
NORTH M3-1 (36"X18") | NORTH M3-1 (36"X18")
INTERSTATE 65 M1-1 (36"X36") | INTERSTATE 65 M1-1 (36"X36")
M6-3 (30"X21") D | M6-2L (30"X21") E

DETOUR M4-8 (30"X15")
NORTH M3-1 (36"X18")
INTERSTATE 65 M1-1 (36"X36")
M6-2R (30"X21") F

SEALED BY

CARTER D. BEARDEN
REGISTERED ENGINEER
AGRICULTURE
LICENSED
No. 11191
STATE OF TENNESSEE
06/26/20

STATE OF TENNESSEE
DEPARTMENT OF TRANSPORTATION

TRAFFIC CONTROL PLANS

TYPE	YEAR	PROJECT NO.	SHEET NO.
CONST.	2020	19009-4191-04	8

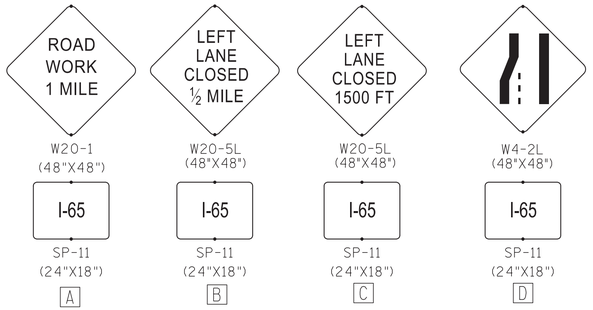

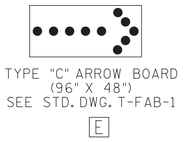

TRAFFIC CONTROL LEGEND

- FLEXIBLE DRUMS (CHANNELIZING)
- SIGN
- FLASHING ARROW BOARD (TYPE C)
- RSSWL REMOVABLE SINGLE SOLID WHITE LINE

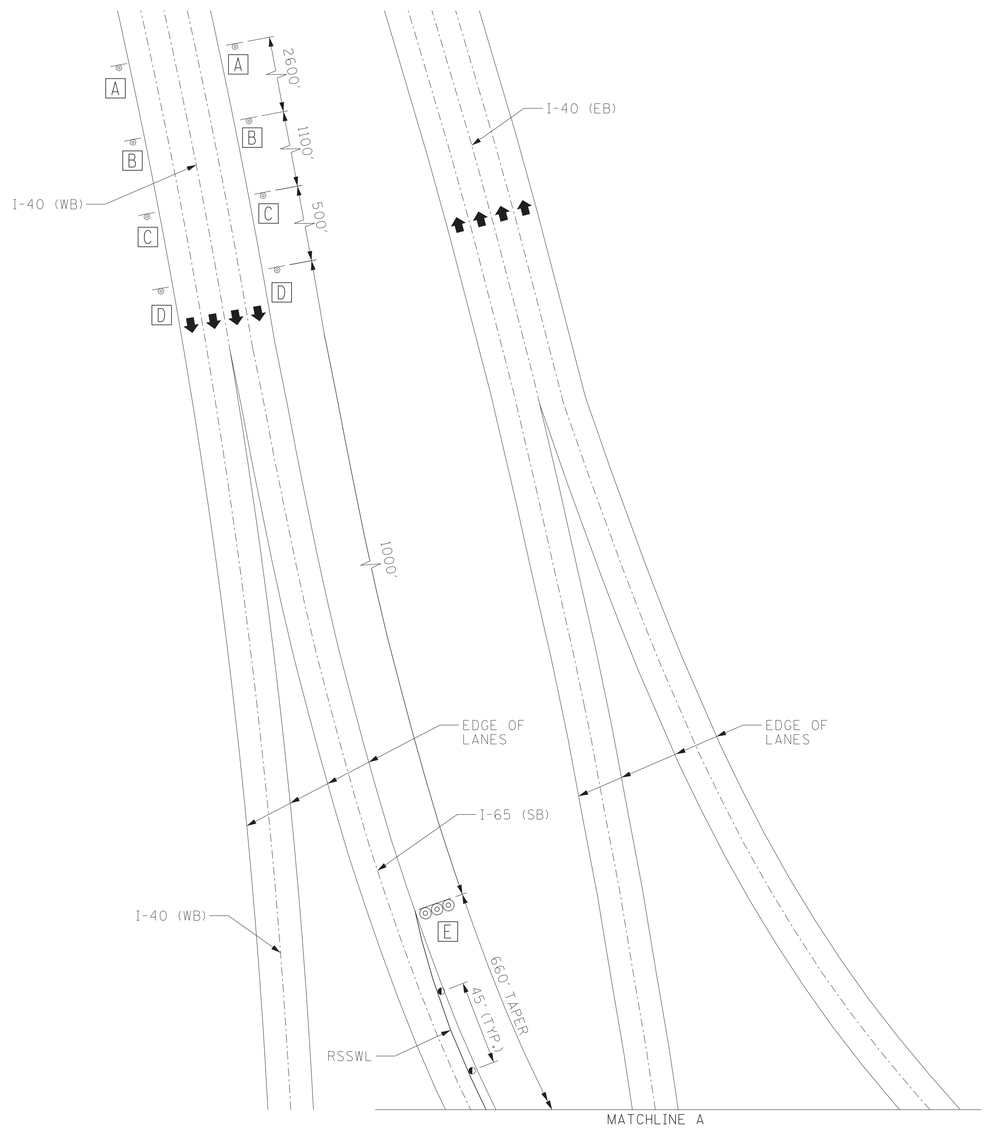

INTERSTATE 65 CLOSURE WEEKEND 2&3 - PART 1

NOT TO SCALE

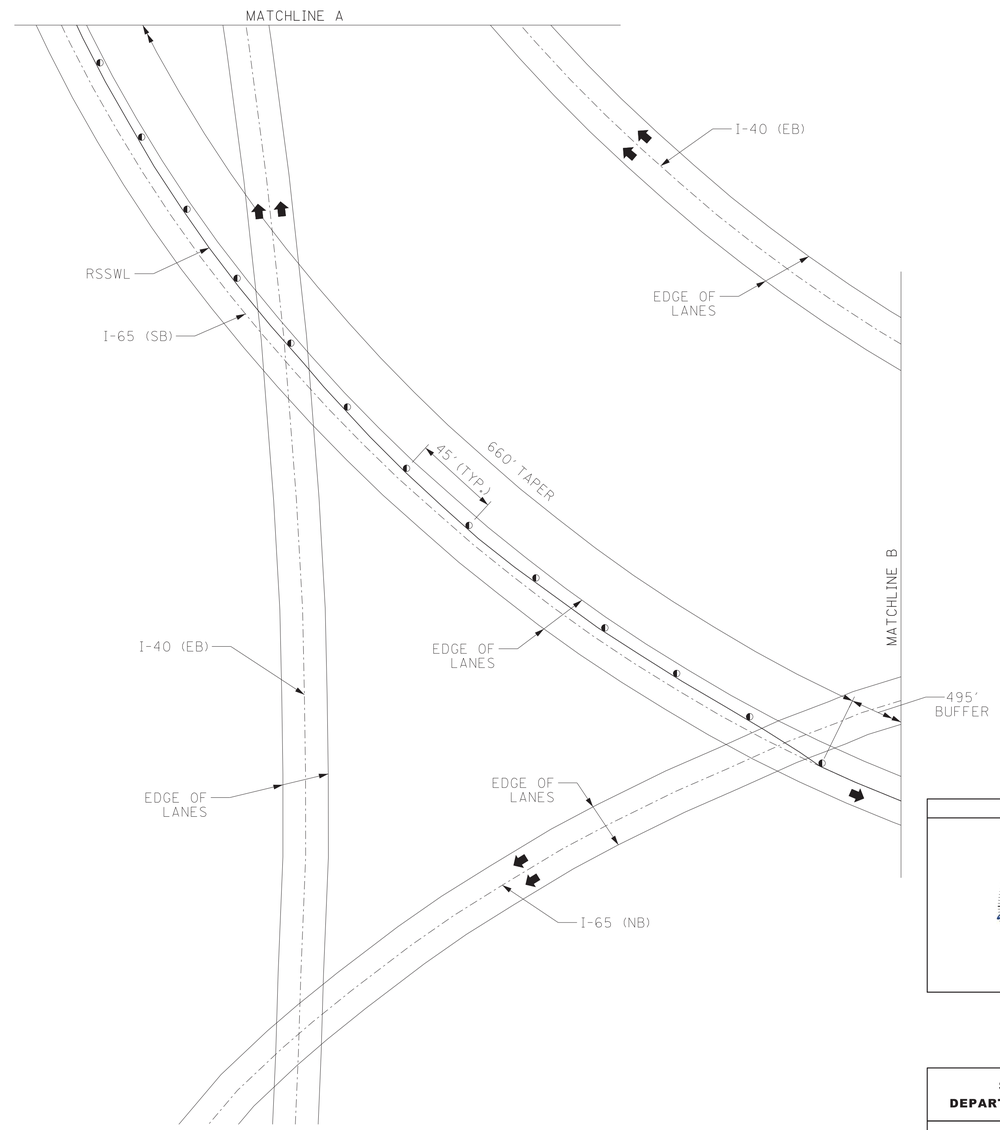

INTERSTATE 65 CLOSURE WEEKEND 2&3 - PART 2

NOT TO SCALE

SEALED BY

06/26/20

STATE OF TENNESSEE
DEPARTMENT OF TRANSPORTATION

TRAFFIC CONTROL PLANS

TYPE	YEAR	PROJECT NO.	SHEET NO.
CONST.	2020	19009-4191-04	9

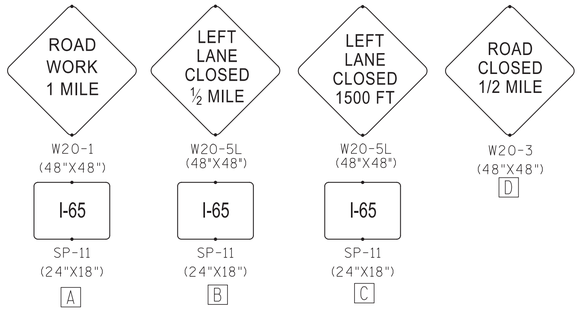

● NOTE: ERECTION OF SPEED REDUCTION SIGNS WILL ONLY BE PERMITTED UPON WRITTEN REQUEST BY THE CONTRACTOR AND WRITTEN APPROVAL BY THE STATE TRAFFIC ENGINEER.

TRAFFIC CONTROL LEGEND

- FLEXIBLE DRUMS (CHANNELIZING)
- SIGN
- RSSWL REMOVABLE SINGLE SOLID WHITE LINE

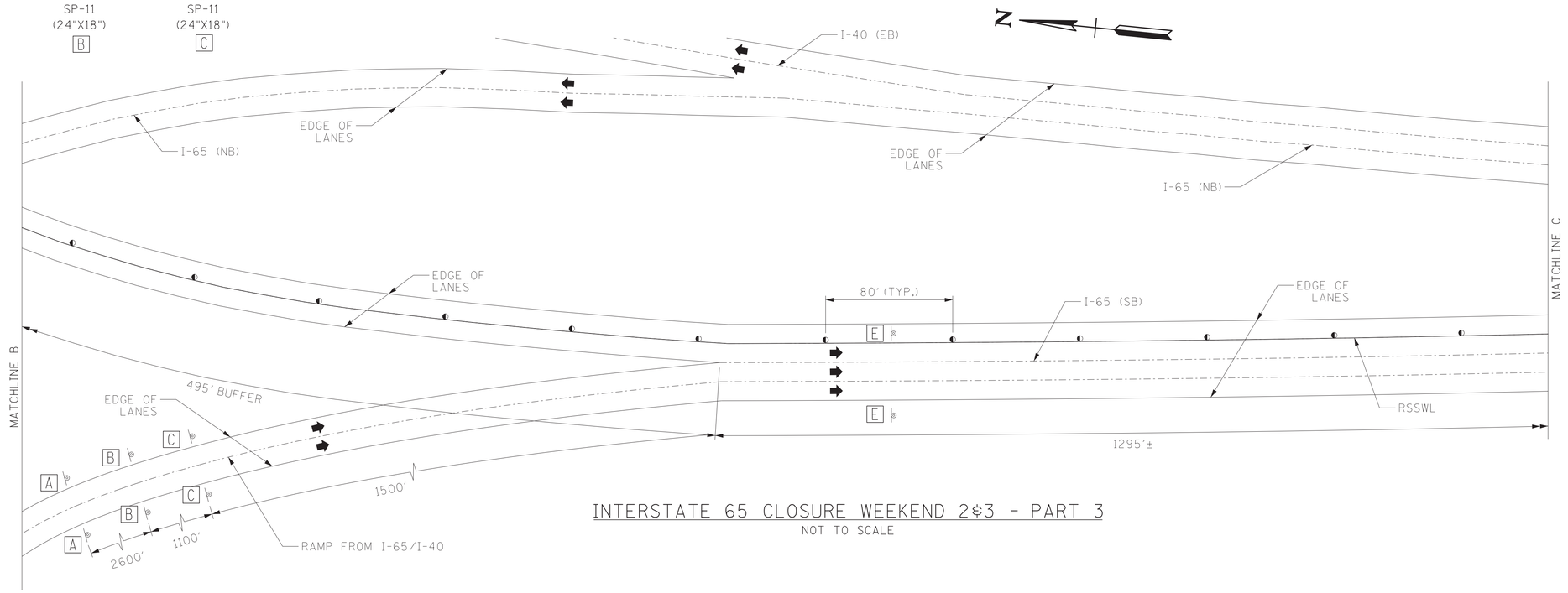

INTERSTATE 65 CLOSURE WEEKEND 2&3 - PART 3

NOT TO SCALE

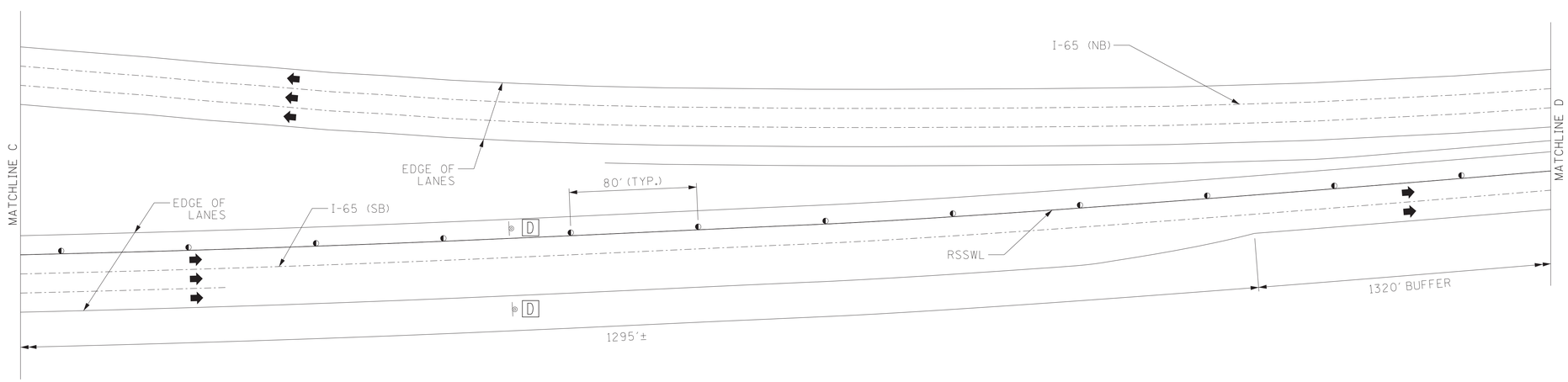

INTERSTATE 65 CLOSURE WEEKEND 2&3 - PART 4

NOT TO SCALE

SEALED BY

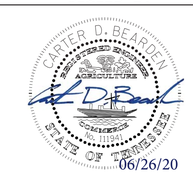

STATE OF TENNESSEE
DEPARTMENT OF TRANSPORTATION

TRAFFIC CONTROL PLANS

TYPE	YEAR	PROJECT NO.	SHEET NO.
CONST.	2020	19009-4191-04	10

W4-2L
(48"X48")
A

W20-3
(48"X48")
B

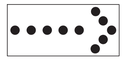

TYPE "C" ARROW BOARD
(96" X 48")
SEE STD. DWG. T-FAB-1
C

TRAFFIC CONTROL LEGEND

- FLEXIBLE DRUMS (CHANNELIZING)
- SIGN
- FLASHING ARROW BOARD (TYPE C)
- RSSWL REMOVABLE SINGLE SOLID WHITE LINE

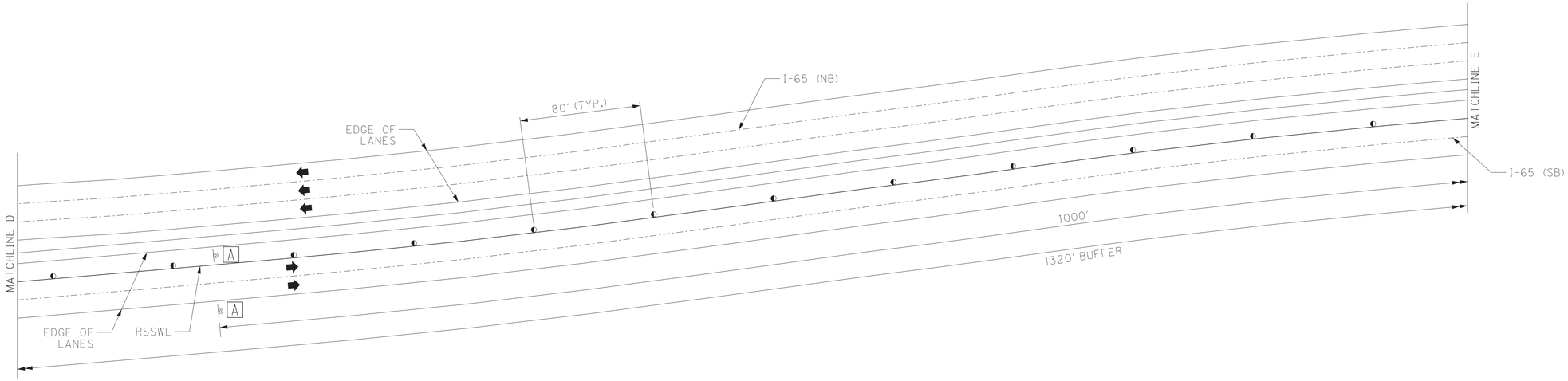

INTERSTATE 65 CLOSURE WEEKEND 2&3 - PART 5

NOT TO SCALE

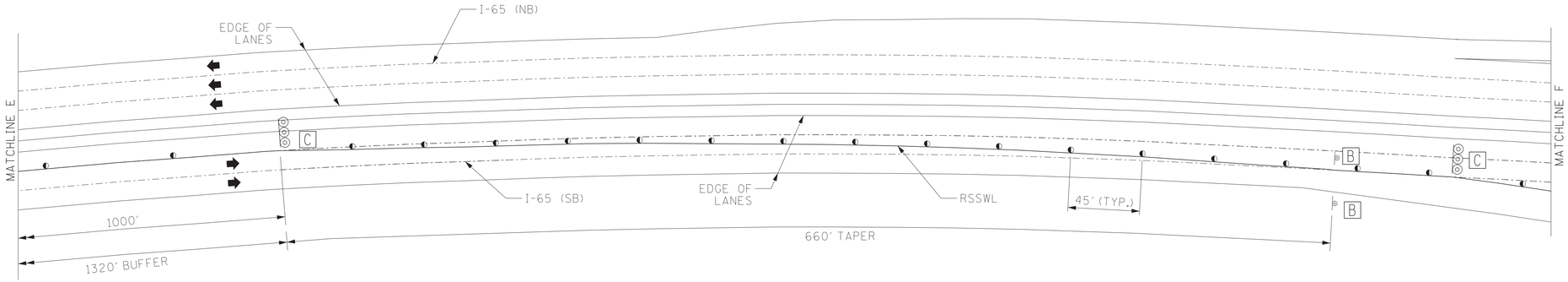

INTERSTATE 65 CLOSURE WEEKEND 2&3 - PART 6

NOT TO SCALE

SEALED BY

06/26/20

STATE OF TENNESSEE
DEPARTMENT OF TRANSPORTATION

TRAFFIC
CONTROL
PLANS

TYPE	YEAR	PROJECT NO.	SHEET NO.
CONST.	2020	19009-4191-04	11

RII-2
(48"X30")

TYPE III BARRICADE
A

W20-2
(48"X48")
B

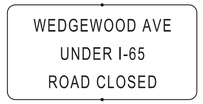

SPECIAL 1
(60"X30")

M4-9R
(48"X36")
C

M4-8
(30"X15")

M3-3
(36"X18")

M1-1
(36"X36")

M6-3
(30"X21")
D

TRAFFIC CONTROL LEGEND

- FLEXIBLE DRUMS (CHANNELIZING)
- SIGN
- TYPE III BARRICADE
- RSSWL REMOVABLE SINGLE SOLID WHITE LINE

WORKSPACE

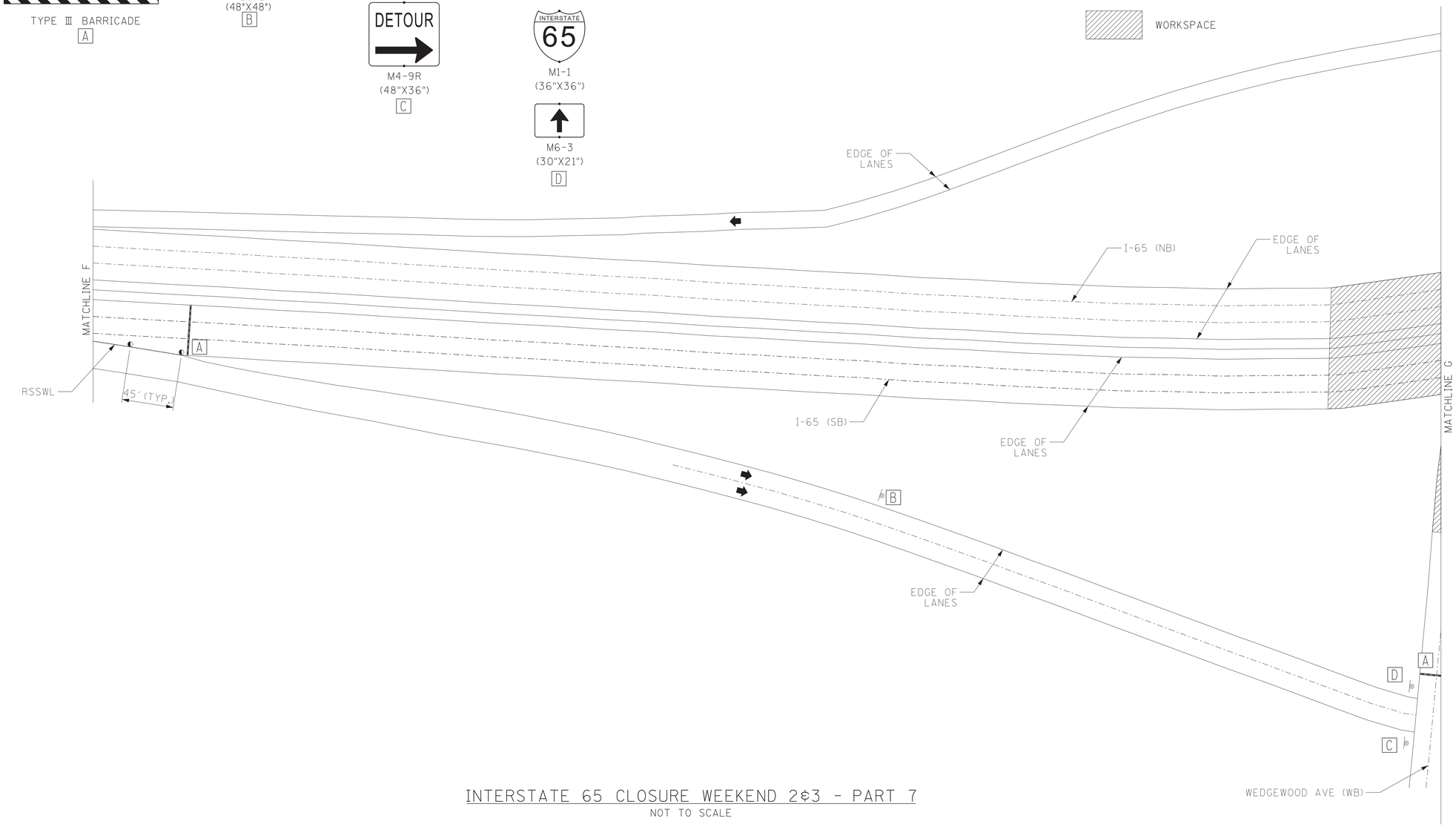

INTERSTATE 65 CLOSURE WEEKEND 2&3 - PART 7

NOT TO SCALE

SEALED BY

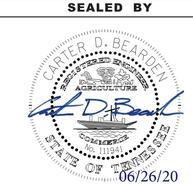

06/26/20

STATE OF TENNESSEE
DEPARTMENT OF TRANSPORTATION

TRAFFIC
CONTROL
PLANS

TYPE	YEAR	PROJECT NO.	SHEET NO.
CONST.	2020	19009-4191-04	12

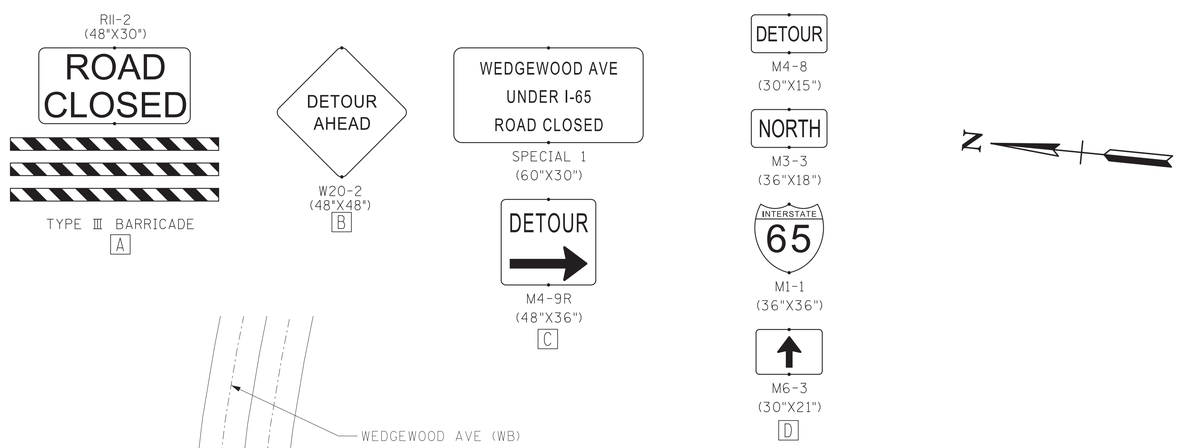

TRAFFIC CONTROL LEGEND

- FLEXIBLE DRUMS (CHANNELIZING)
- SIGN
- TYPE III BARRICADE
- RSSWL REMOVABLE SINGLE SOLID WHITE LINE
- WORKSPACE

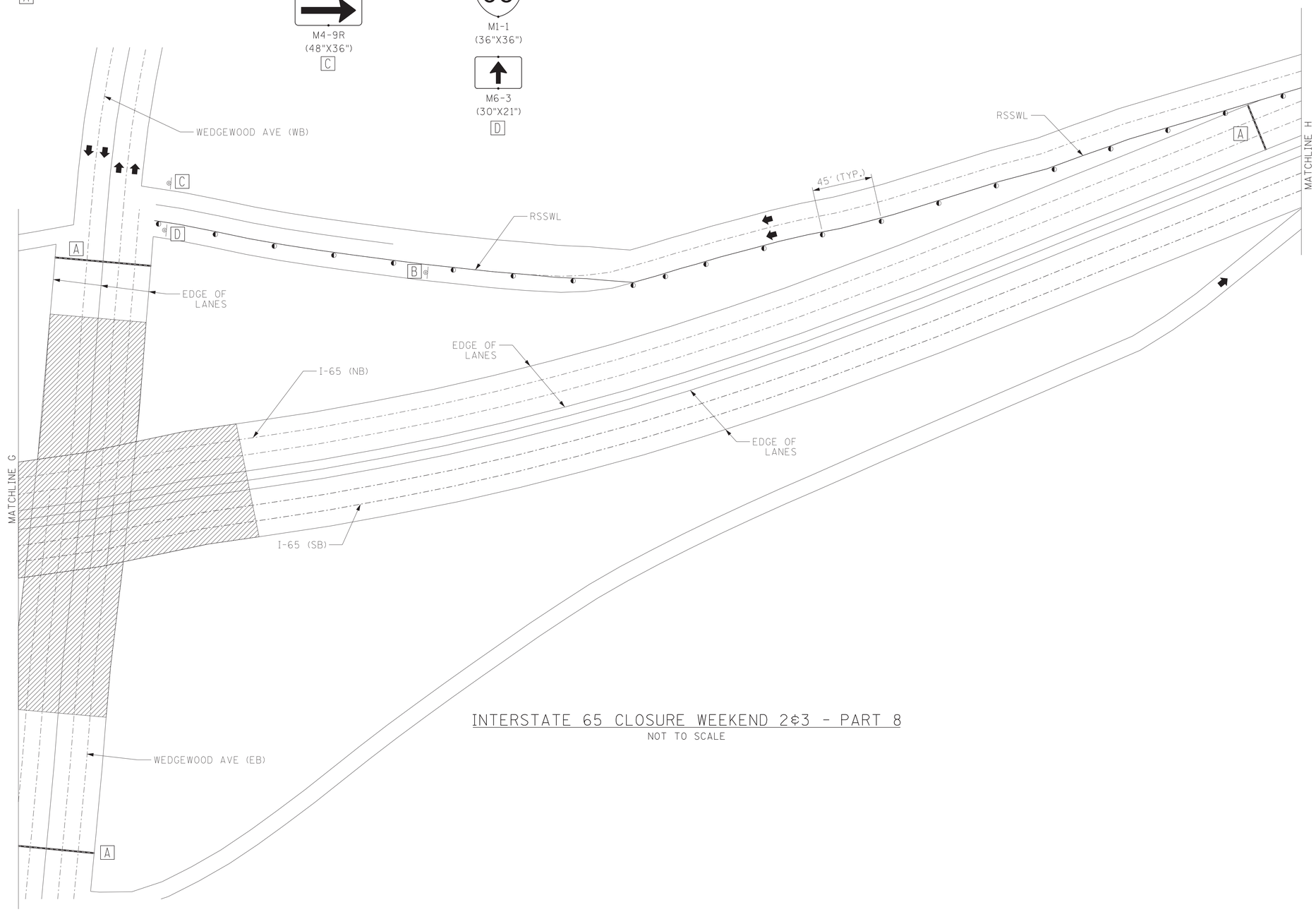

INTERSTATE 65 CLOSURE WEEKEND 2&3 - PART 8

NOT TO SCALE

SEALED BY

06/26/20

STATE OF TENNESSEE
DEPARTMENT OF TRANSPORTATION

TRAFFIC CONTROL PLANS

TYPE	YEAR	PROJECT NO.	SHEET NO.
CONST.	2020	19009-4191-04	13

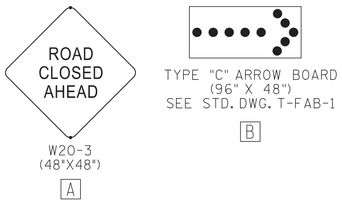

TRAFFIC CONTROL LEGEND

- FLEXIBLE DRUMS (CHANNELIZING)
- SIGN
- FLASHING ARROW BOARD (TYPE C)
- RSSWL REMOVABLE SINGLE SOLID WHITE LINE

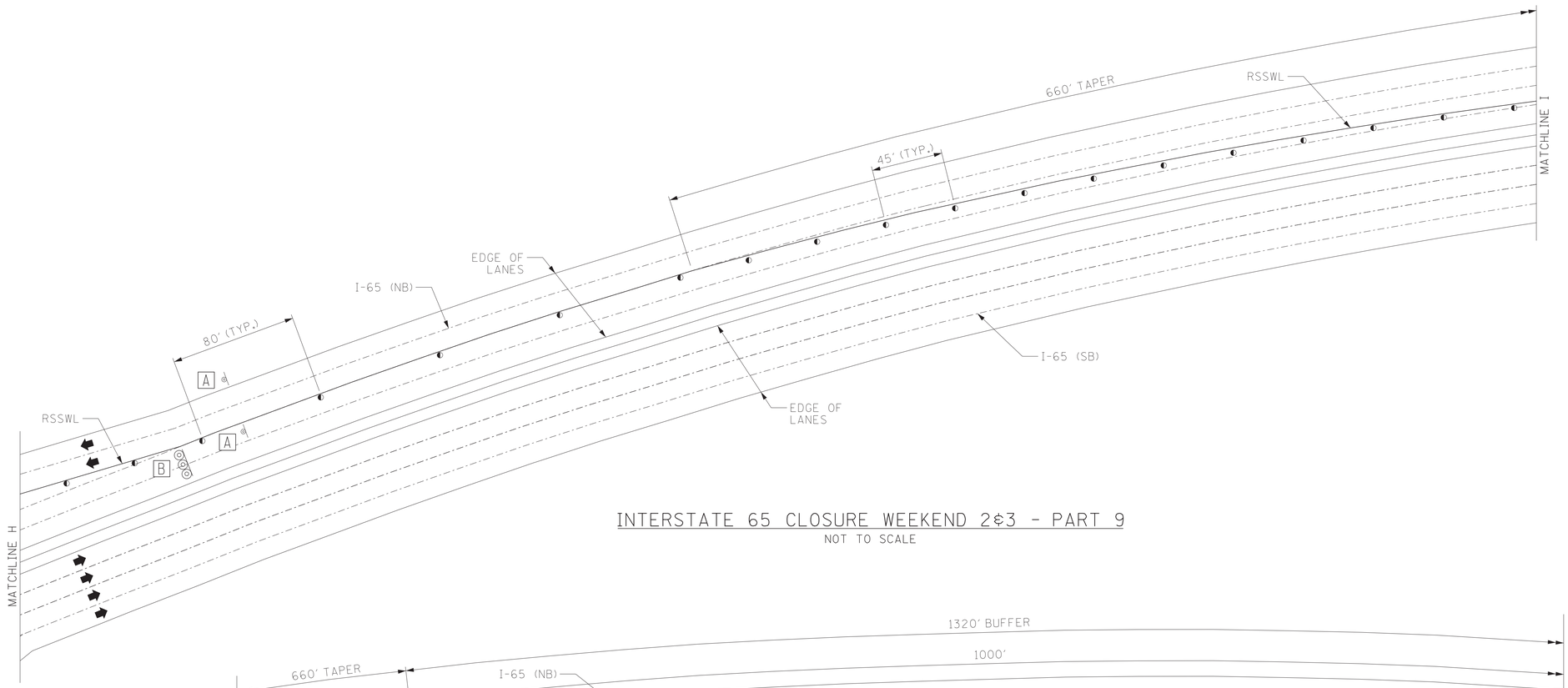

INTERSTATE 65 CLOSURE WEEKEND 2&3 - PART 9

NOT TO SCALE

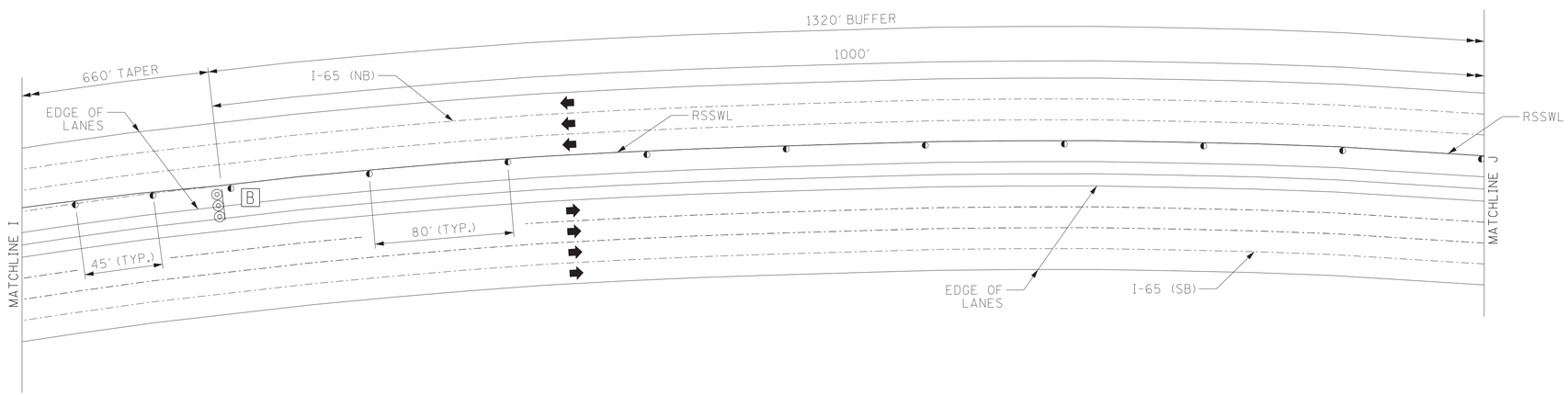

INTERSTATE 65 CLOSURE WEEKEND 2&3 - PART 10

NOT TO SCALE

SEALED BY

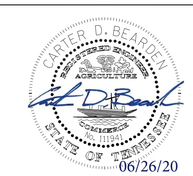

06/26/20

STATE OF TENNESSEE
DEPARTMENT OF TRANSPORTATION

TRAFFIC CONTROL PLANS

TYPE	YEAR	PROJECT NO.	SHEET NO.
CONST.	2020	19009-4191-04	14

TRAFFIC CONTROL LEGEND

- FLEXIBLE DRUMS (CHANNELIZING)
- SIGN
- RSSWL REMOVABLE SINGLE SOLID WHITE LINE

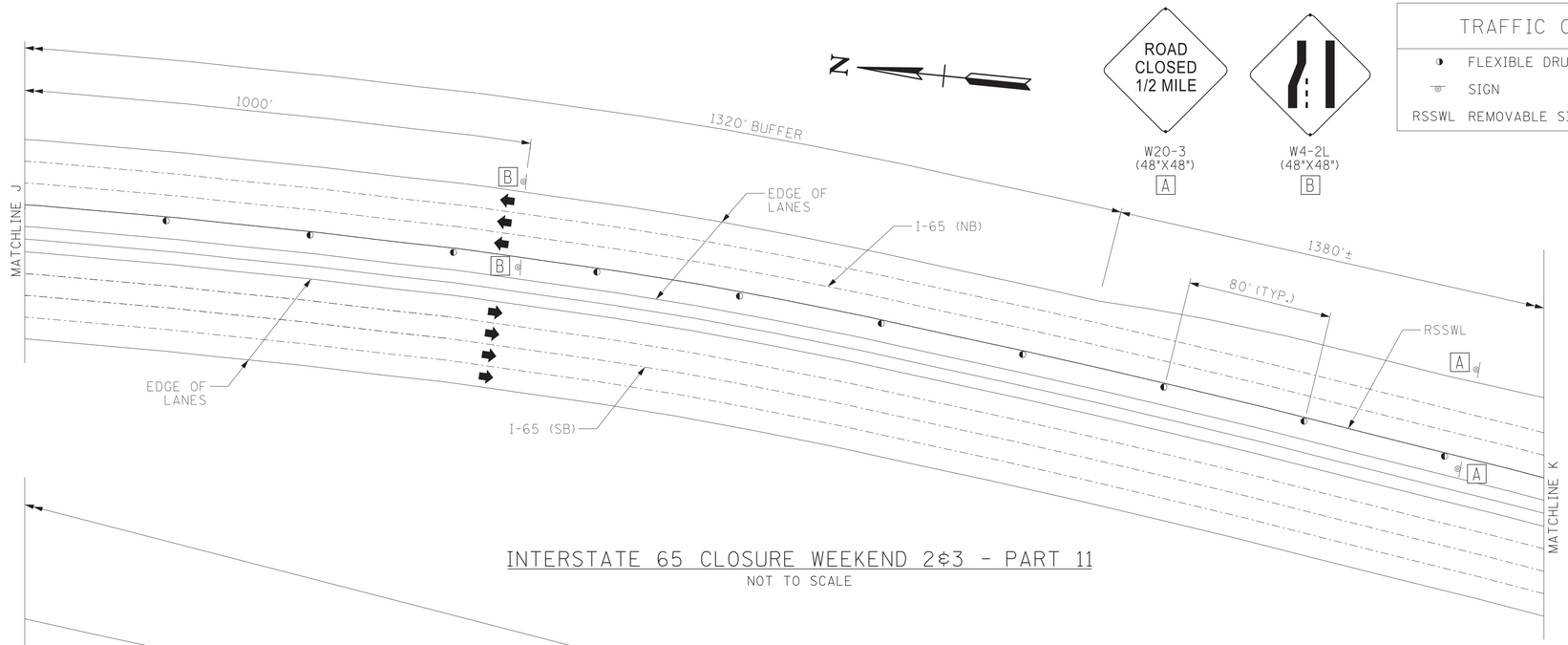

INTERSTATE 65 CLOSURE WEEKEND 2&3 - PART 11

NOT TO SCALE

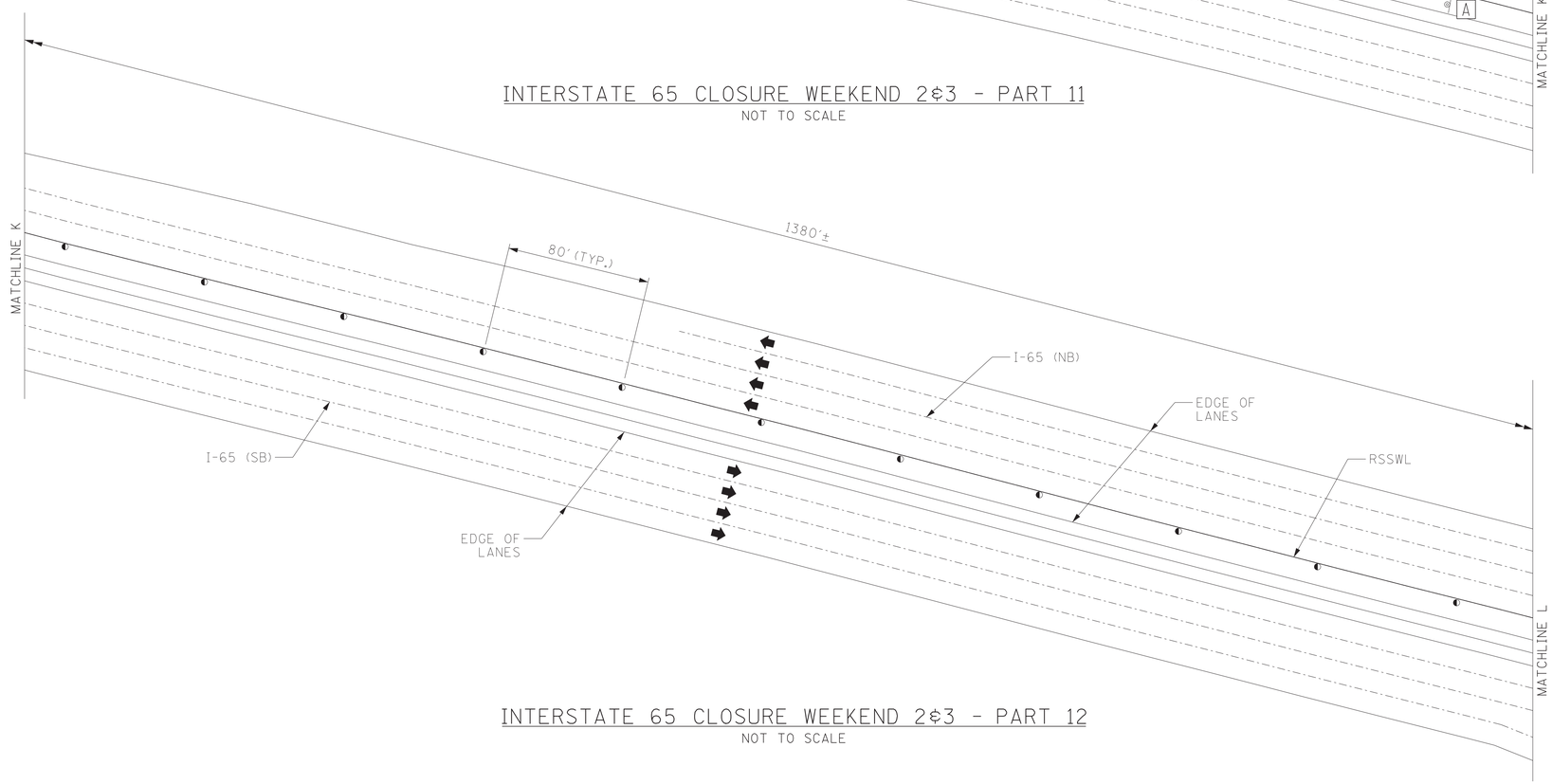

INTERSTATE 65 CLOSURE WEEKEND 2&3 - PART 12

NOT TO SCALE

SEALED BY

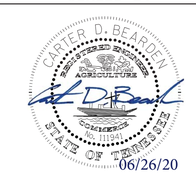

06/26/20

STATE OF TENNESSEE
DEPARTMENT OF TRANSPORTATION

TRAFFIC CONTROL PLANS

TYPE	YEAR	PROJECT NO.	SHEET NO.
CONST.	2020	19009-4191-04	15

TRAFFIC CONTROL LEGEND

	FLEXIBLE DRUMS (CHANNELIZING)
	SIGN
	FLASHING ARROW BOARD (TYPE C)
RSSWL	REMOVABLE SINGLE SOLID WHITE LINE

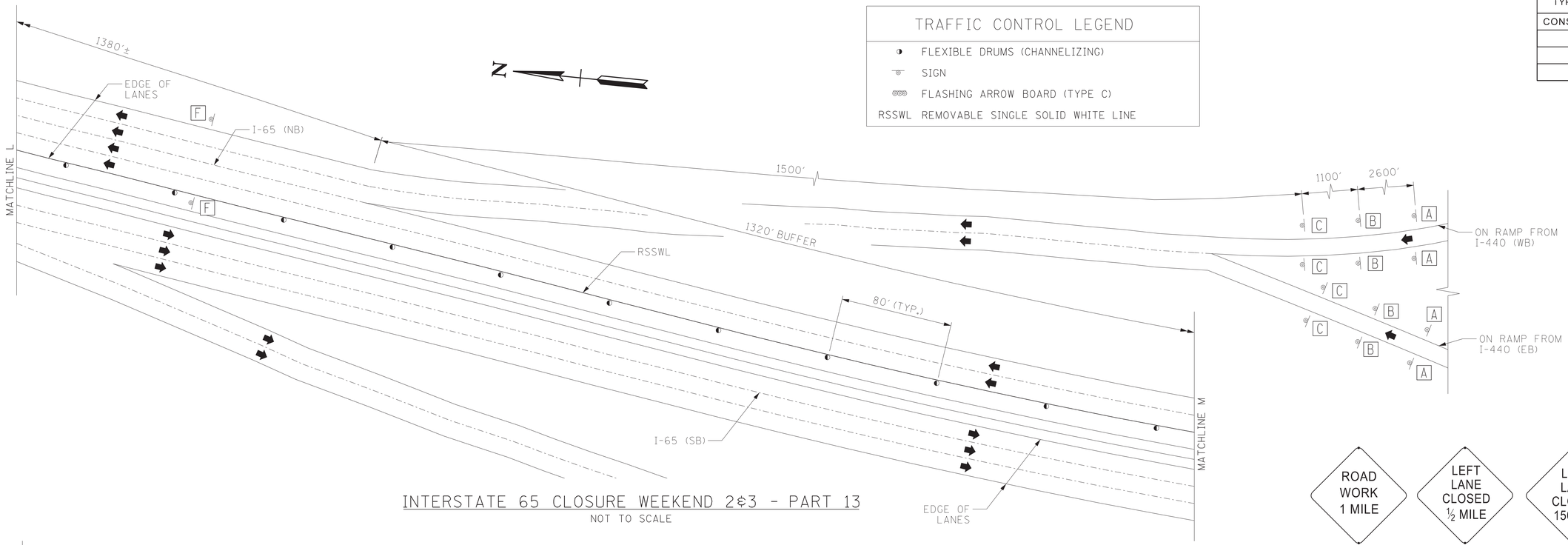

INTERSTATE 65 CLOSURE WEEKEND 2¢3 - PART 13

NOT TO SCALE

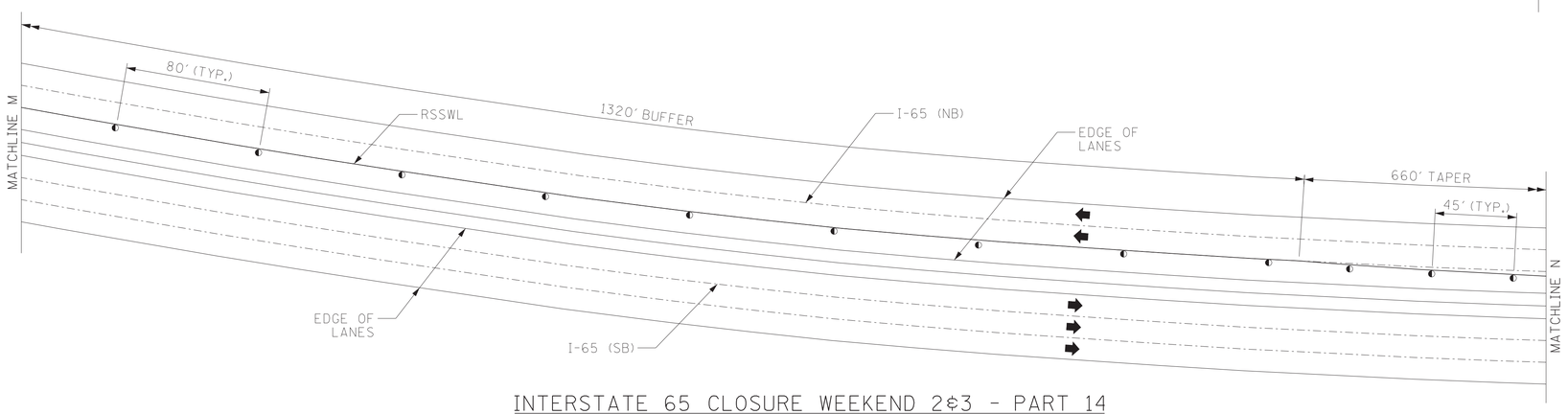

INTERSTATE 65 CLOSURE WEEKEND 2¢3 - PART 14

NOT TO SCALE

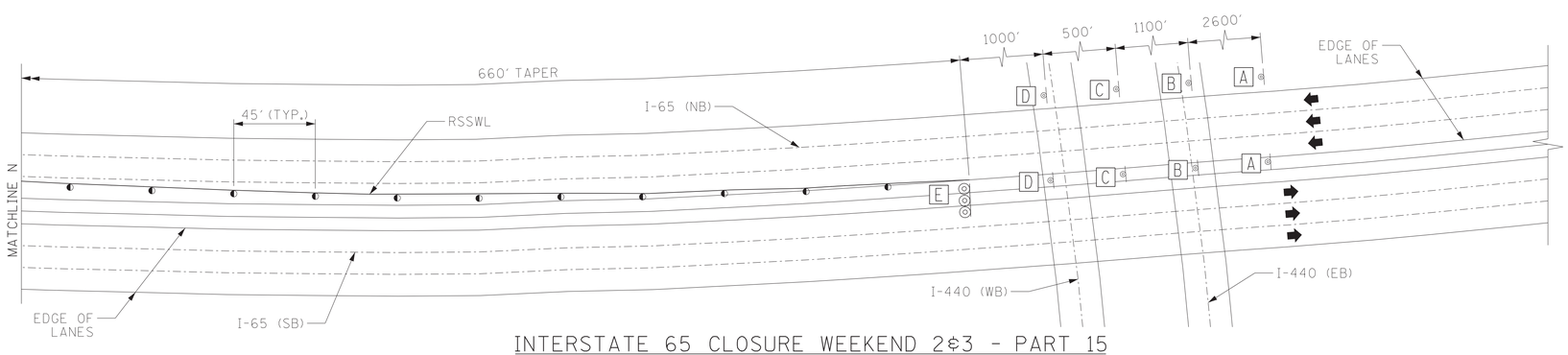

INTERSTATE 65 CLOSURE WEEKEND 2¢3 - PART 15

NOT TO SCALE

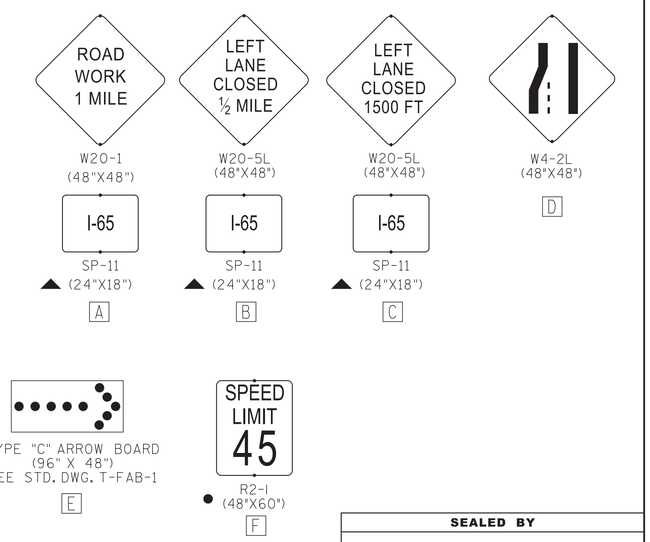

● NOTE: ERECTION OF SPEED REDUCTION SIGNS WILL ONLY BE PERMITTED UPON WRITTEN REQUEST BY THE CONTRACTOR AND WRITTEN APPROVAL BY THE STATE TRAFFIC ENGINEER.

▲ NOTE: SIGN SP-11 TO BE PLACED WITH SIGNS ON I-440 RAMPS.

SEALED BY

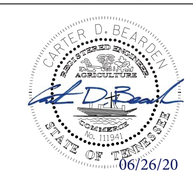

06/26/20

STATE OF TENNESSEE
DEPARTMENT OF TRANSPORTATION

TRAFFIC CONTROL PLANS

TYPE	YEAR	PROJECT NO.	SHEET NO.
CONST.	2020	19009-4191-04	16

ROAD CLOSED
1 MILE AHEAD
LOCAL TRAFFIC ONLY
R11-3A
(60"X30")
A

ROAD CLOSED
1/2 MILE AHEAD
LOCAL TRAFFIC ONLY
R11-3A
(60"X30")
B

ROAD CLOSED
1/4 MILE AHEAD
LOCAL TRAFFIC ONLY
R11-3A
(60"X30")
C

R11-2
(48"X30")
ROAD CLOSED
TYPE III BARRICADE ROAD CLOSURE
D

END DETOUR
M4-8A
(24"X18")
E

N

TRAFFIC CONTROL LEGEND

SIGN

TYPE III BARRICADE

WEDGEWOOD AVE WEEKEND DETOUR
NOT TO SCALE

WEDGEWOOD AVE
UNDER I-65
ROAD CLOSED
SPECIAL 9
(60"X30")

DETOUR
M4-8
(24"X12")

M6-3
(21"X15")
F

WEDGEWOOD AVE
UNDER I-65
ROAD CLOSED
SPECIAL 9
(60"X30")

DETOUR
M4-8
(24"X12")

M6-1L
(21"X15")
G

WEDGEWOOD AVE
UNDER I-65
ROAD CLOSED
SPECIAL 9
(60"X30")

DETOUR
M4-8
(24"X12")

M6-1R
(21"X15")
H

DETOUR
M4-8
(24"X12")

TO
M4-5
(24"X12")

WEDGEWOOD AVE
SPECIAL 10
(60"X30")

M6-3
(21"X15")
J

DETOUR
M4-8
(24"X12")

TO
M4-5
(24"X12")

WEDGEWOOD AVE
SPECIAL 10
(60"X30")

M6-1L
(21"X15")
K

DETOUR
M4-8
(24"X12")

TO
M4-5
(24"X12")

WEDGEWOOD AVE
SPECIAL 10
(60"X30")

M6-1R
(21"X15")
L

WEDGEWOOD AVE
UNDER I-65
ROAD CLOSED
SPECIAL 9
(60"X30")

DETOUR
M4-9R
(48"X36")
M

SPECIAL 12
(60"X30")
* N

SPECIAL 13
(60"X30")
* O

* NOTE: EXACT LANGUAGE AND LOCATION OF BUS STOP SIGNS TO BE DETERMINED BY ENGINEER.

SEALED BY

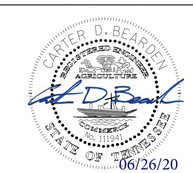

STATE OF TENNESSEE
DEPARTMENT OF TRANSPORTATION

TRAFFIC CONTROL PLANS

TYPE	YEAR	PROJECT NO.	SHEET NO.
CONST.	2020	19009-4191-04	17

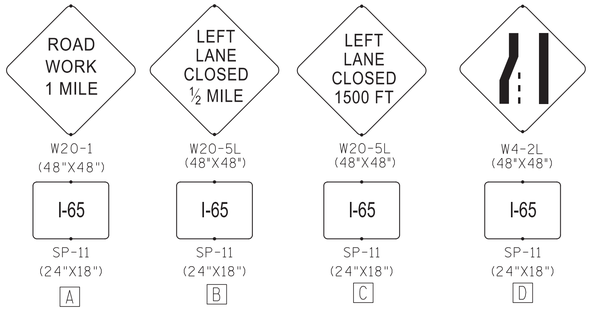

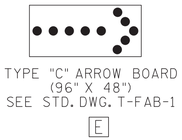

TRAFFIC CONTROL LEGEND

- FLEXIBLE DRUMS (CHANNELIZING)
- SIGN
- FLASHING ARROW BOARD (TYPE C)

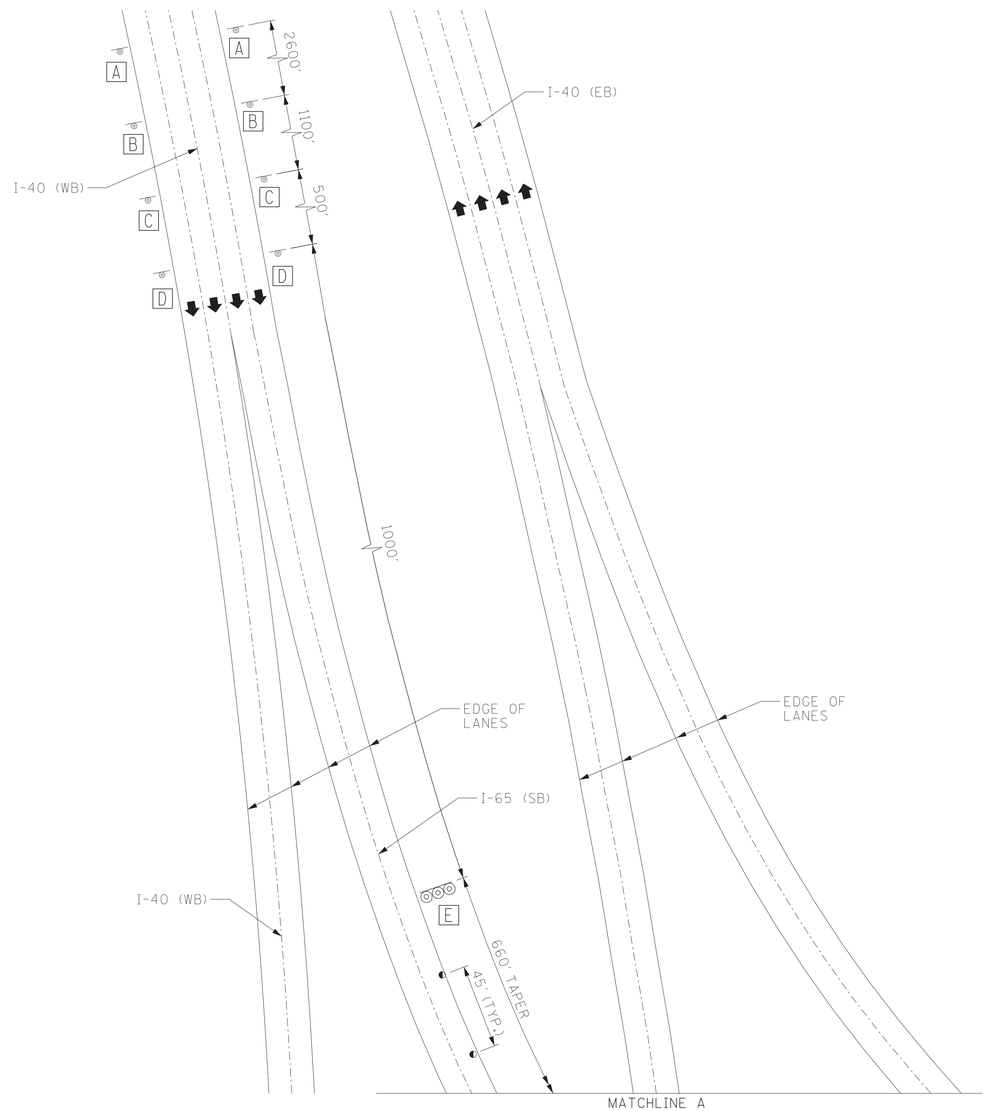

INTERSTATE 65 WEEKDAY NIGHT AFTER WEEKEND 2
PHASE I - PART 1
NOT TO SCALE

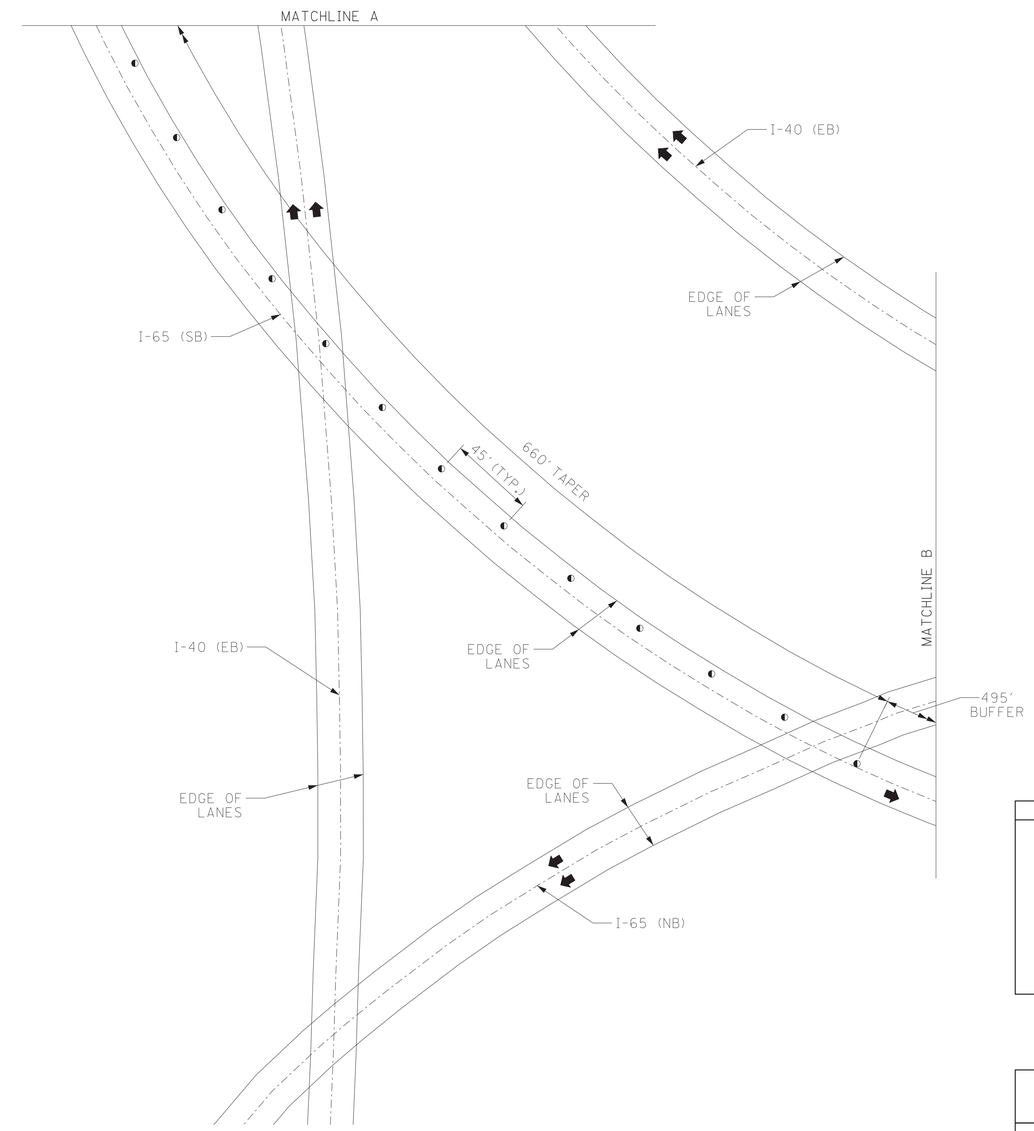

INTERSTATE 65 WEEKDAY NIGHT AFTER WEEKEND 2
PHASE I - PART 2
NOT TO SCALE

SEALED BY

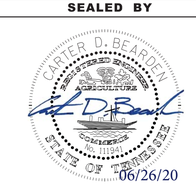

06/26/20

STATE OF TENNESSEE
DEPARTMENT OF TRANSPORTATION

TRAFFIC CONTROL PLANS

TYPE	YEAR	PROJECT NO.	SHEET NO.
CONST.	2020	19009-4191-04	18

TRAFFIC CONTROL LEGEND

- FLEXIBLE DRUMS (CHANNELIZING)
- SIGN

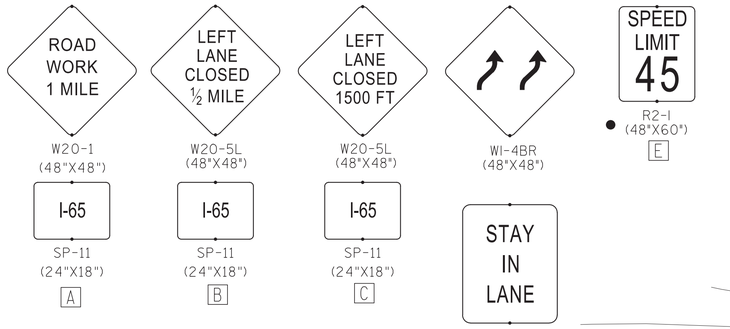

● NOTE: ERECTION OF SPEED REDUCTION SIGNS WILL ONLY BE PERMITTED UPON WRITTEN REQUEST BY THE CONTRACTOR AND WRITTEN APPROVAL BY THE STATE TRAFFIC ENGINEER.

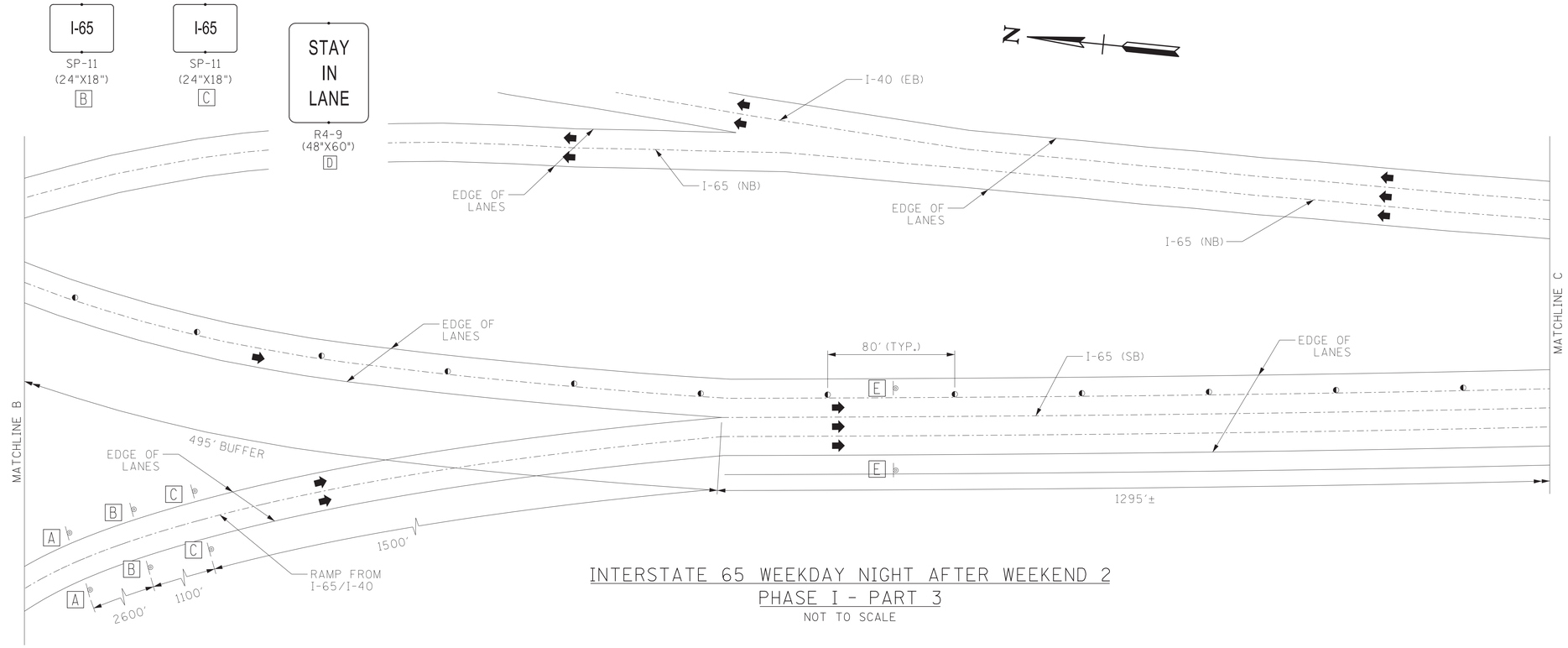

INTERSTATE 65 WEEKDAY NIGHT AFTER WEEKEND 2
PHASE I - PART 3
NOT TO SCALE

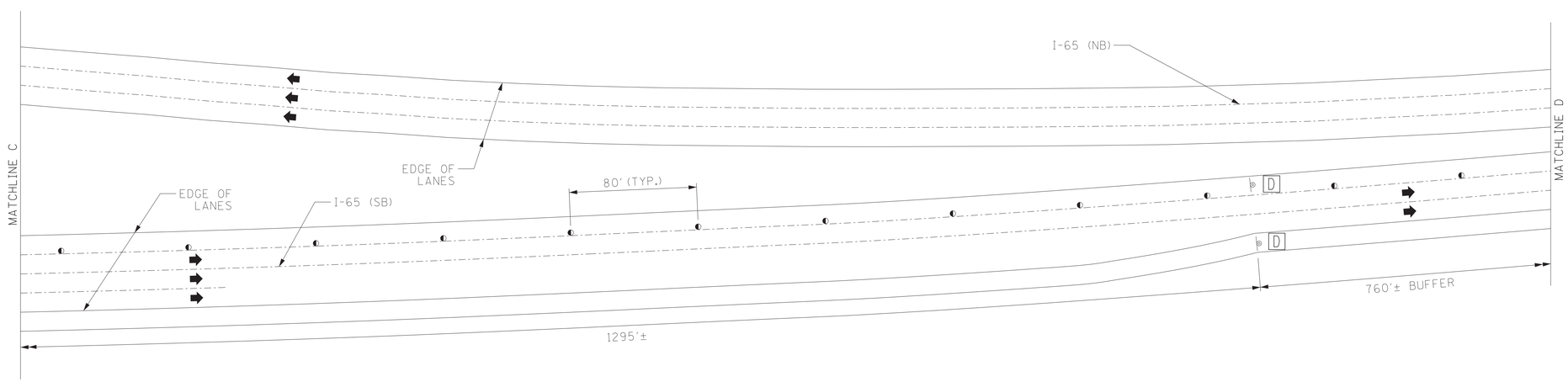

INTERSTATE 65 WEEKDAY NIGHT AFTER WEEKEND 2
PHASE I - PART 4
NOT TO SCALE

SEALED BY

STATE OF TENNESSEE
DEPARTMENT OF TRANSPORTATION

TRAFFIC CONTROL PLANS

TYPE	YEAR	PROJECT NO.	SHEET NO.
CONST.	2020	19009-4191-04	19

END ROAD WORK

G20-2
(48"X24")
A

EXIT OPEN

E5-2
(48"X36")
B

TRAFFIC CONTROL LEGEND

- FLEXIBLE DRUMS (CHANNELIZING)
- SIGN

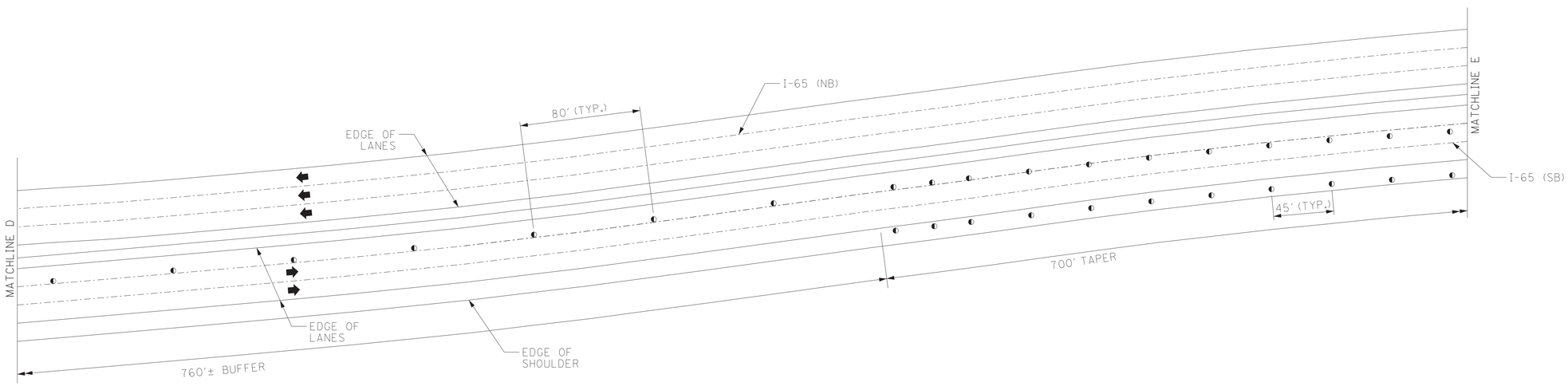

INTERSTATE 65 WEEKDAY NIGHT AFTER WEEKEND 2
PHASE I - PART 5
NOT TO SCALE

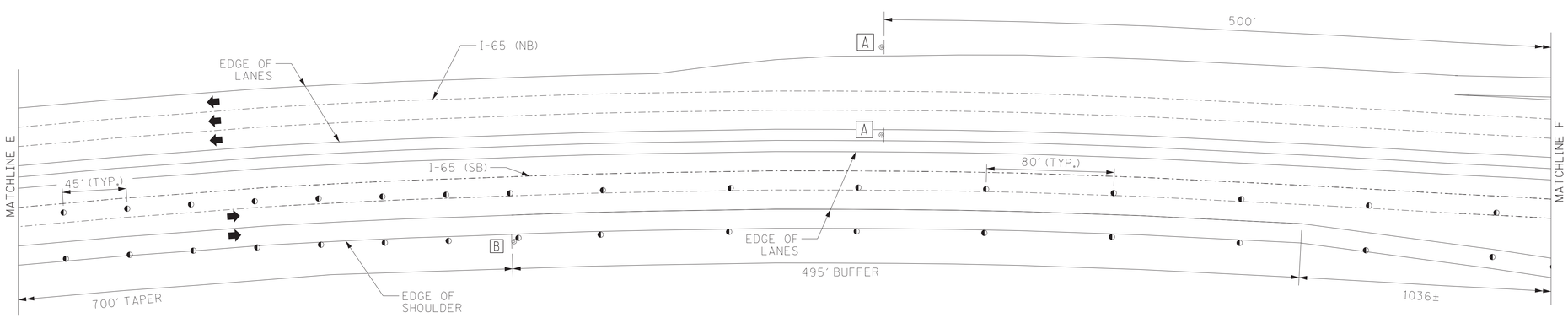

INTERSTATE 65 WEEKDAY NIGHT AFTER WEEKEND 2
PHASE I - PART 6
NOT TO SCALE

SEALED BY

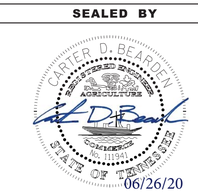

06/26/20

STATE OF TENNESSEE
DEPARTMENT OF TRANSPORTATION

TRAFFIC CONTROL PLANS

TYPE	YEAR	PROJECT NO.	SHEET NO.
CONST.	2020	19009-4191-04	20

TRAFFIC CONTROL LEGEND

◐ FLEXIBLE DRUMS (CHANNELIZING)

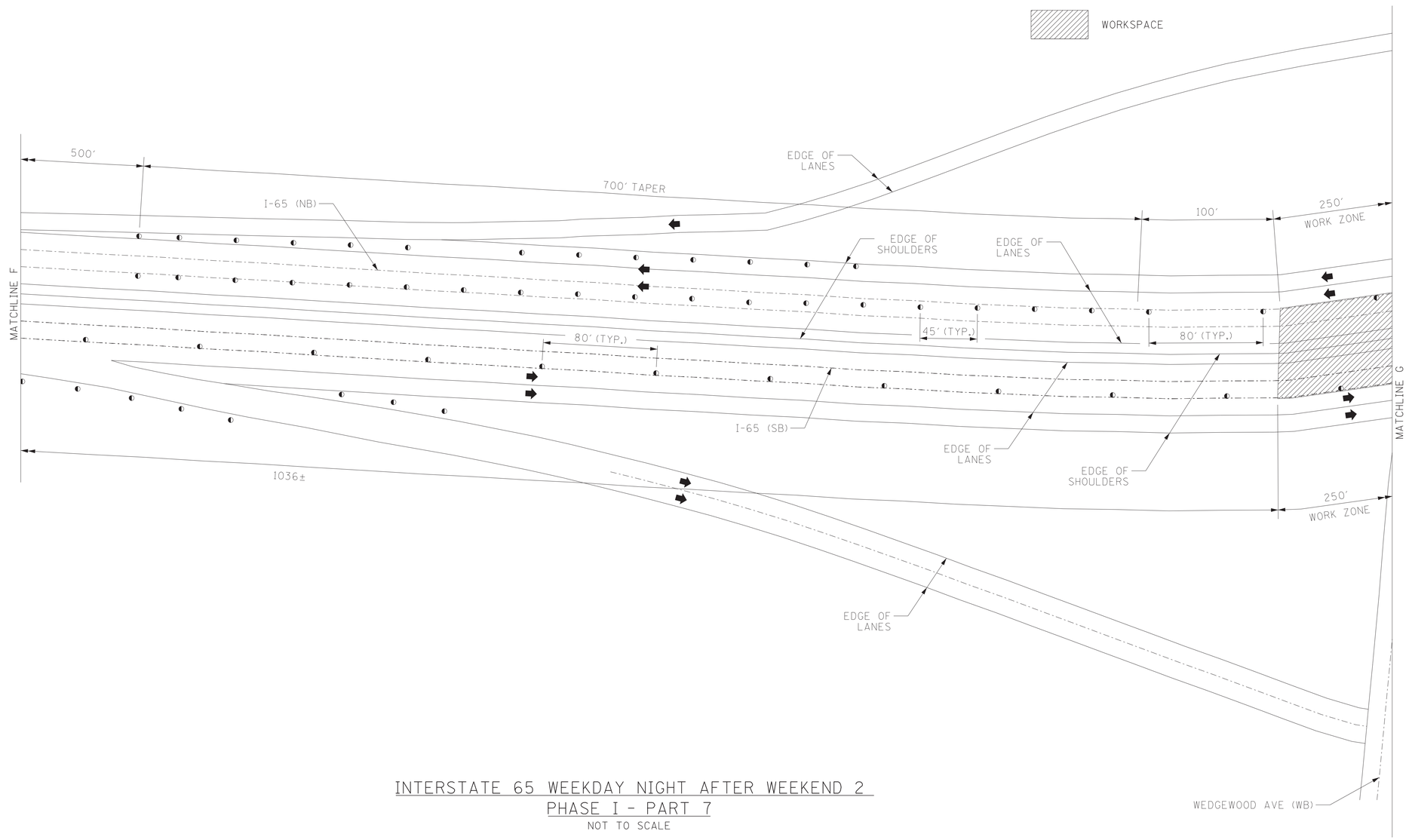

INTERSTATE 65 WEEKDAY NIGHT AFTER WEEKEND 2
PHASE I - PART 7
NOT TO SCALE

SEALED BY

STATE OF TENNESSEE
DEPARTMENT OF TRANSPORTATION

TRAFFIC CONTROL PLANS

TYPE	YEAR	PROJECT NO.	SHEET NO.
CONST.	2020	19009-4191-04	21

TRAFFIC CONTROL LEGEND

- FLEXIBLE DRUMS (CHANNELIZING)
- SIGN

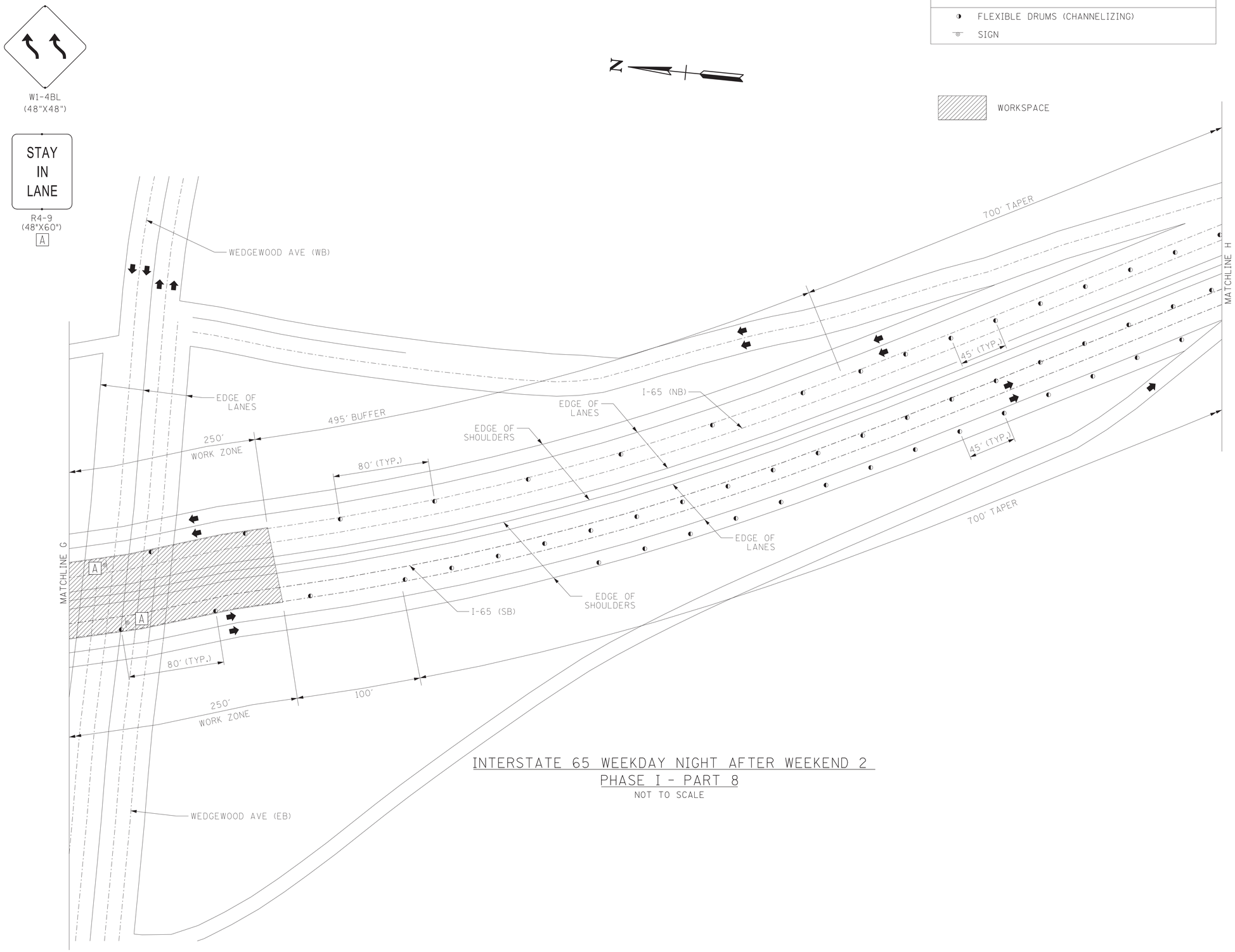

INTERSTATE 65 WEEKDAY NIGHT AFTER WEEKEND 2
PHASE I - PART 8
NOT TO SCALE

SEALED BY

06/26/20

STATE OF TENNESSEE
DEPARTMENT OF TRANSPORTATION

TRAFFIC CONTROL PLANS

TYPE	YEAR	PROJECT NO.	SHEET NO.
CONST.	2020	19009-4191-04	22

TRAFFIC CONTROL LEGEND

- FLEXIBLE DRUMS (CHANNELIZING)
- SIGN

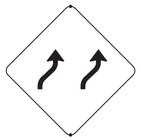

W1-4BR
(48"X48")

EXIT OPEN

E5-2
(48"X36")
B

END ROAD WORK

G20-2
(48"X24")
C

STAY IN LANE

R4-9
(48"X60")
A

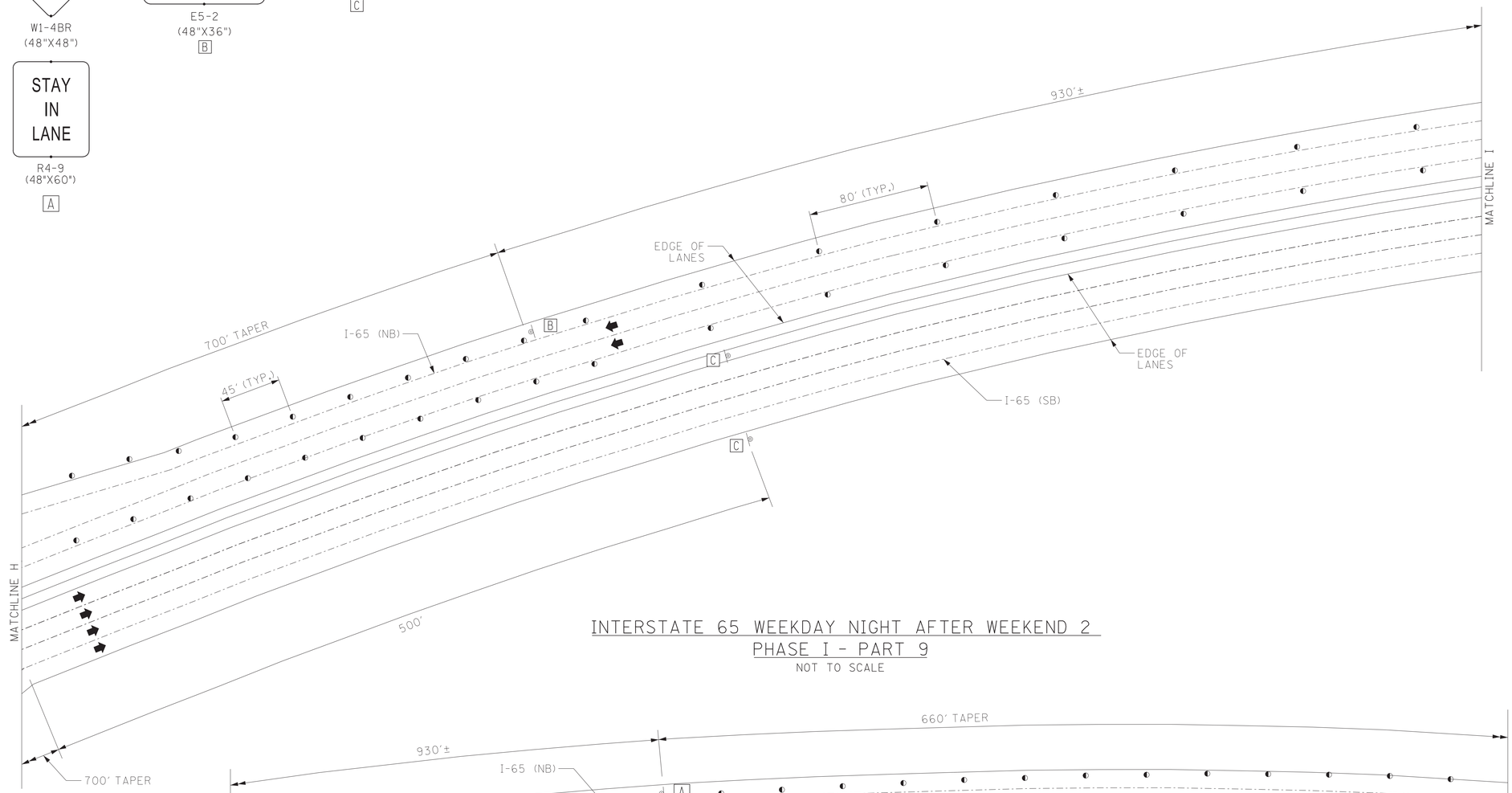

INTERSTATE 65 WEEKDAY NIGHT AFTER WEEKEND 2
PHASE I - PART 9
NOT TO SCALE

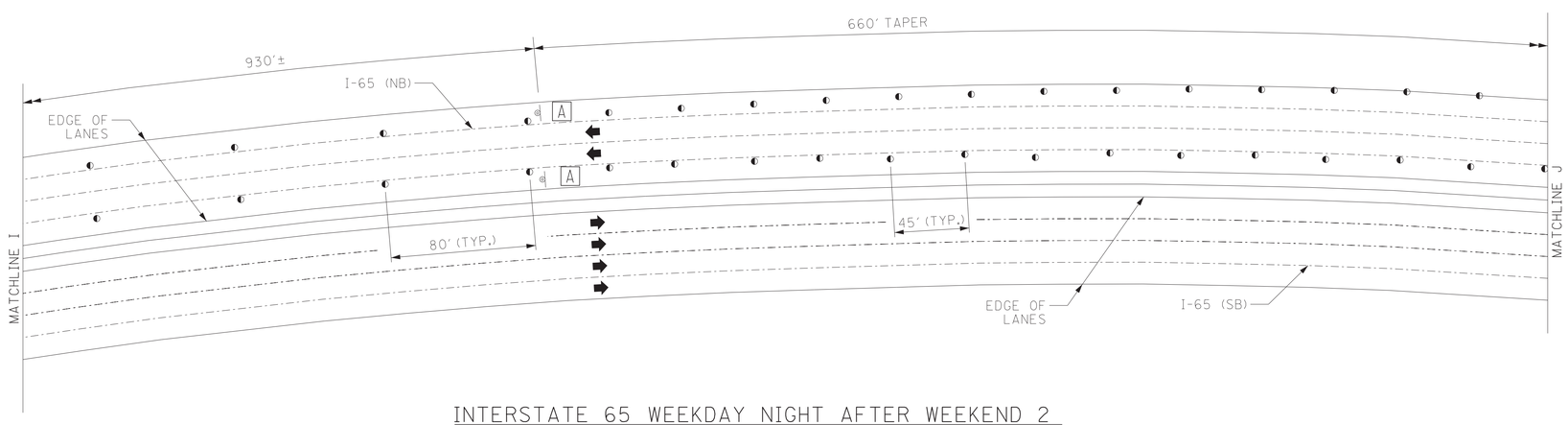

INTERSTATE 65 WEEKDAY NIGHT AFTER WEEKEND 2
PHASE I - PART 10
NOT TO SCALE

SEALED BY

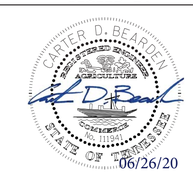

06/26/20

STATE OF TENNESSEE
DEPARTMENT OF TRANSPORTATION

TRAFFIC CONTROL PLANS

TYPE	YEAR	PROJECT NO.	SHEET NO.
CONST.	2020	19009-4191-04	23

TRAFFIC CONTROL LEGEND

- FLEXIBLE DRUMS (CHANNELIZING)
- SIGN

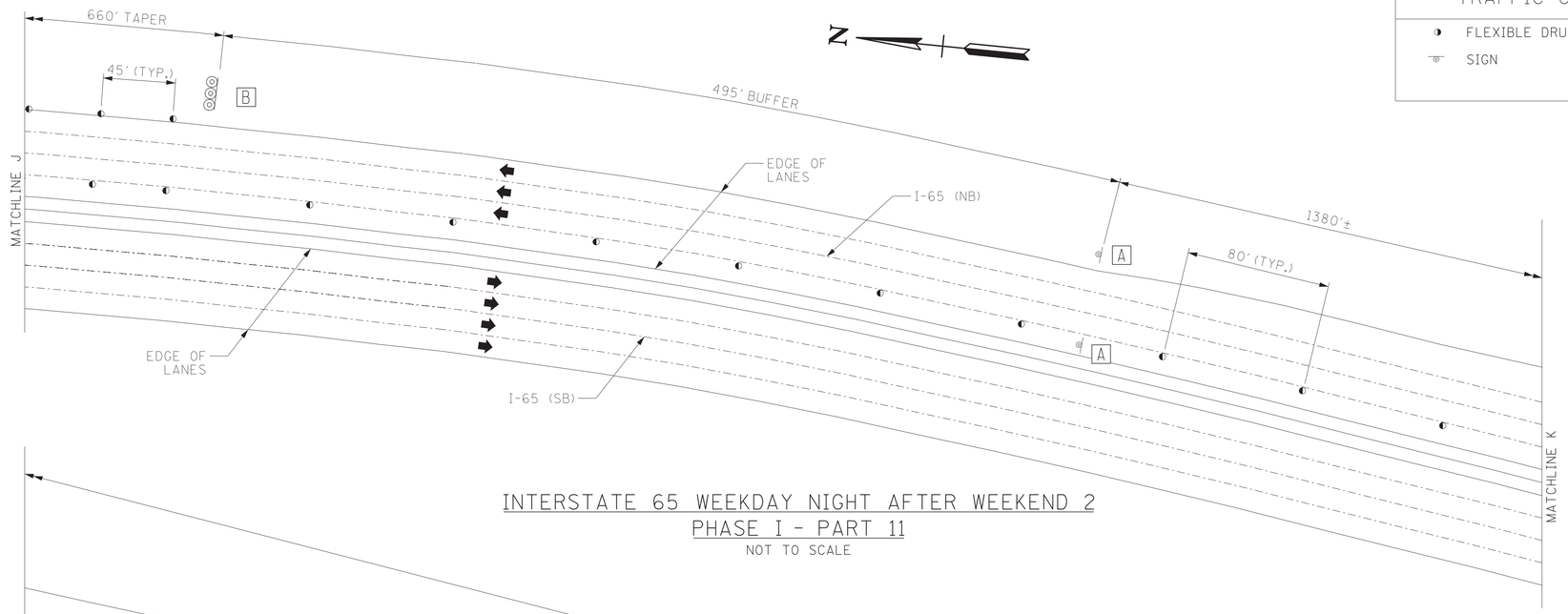

INTERSTATE 65 WEEKDAY NIGHT AFTER WEEKEND 2
PHASE I - PART 11
NOT TO SCALE

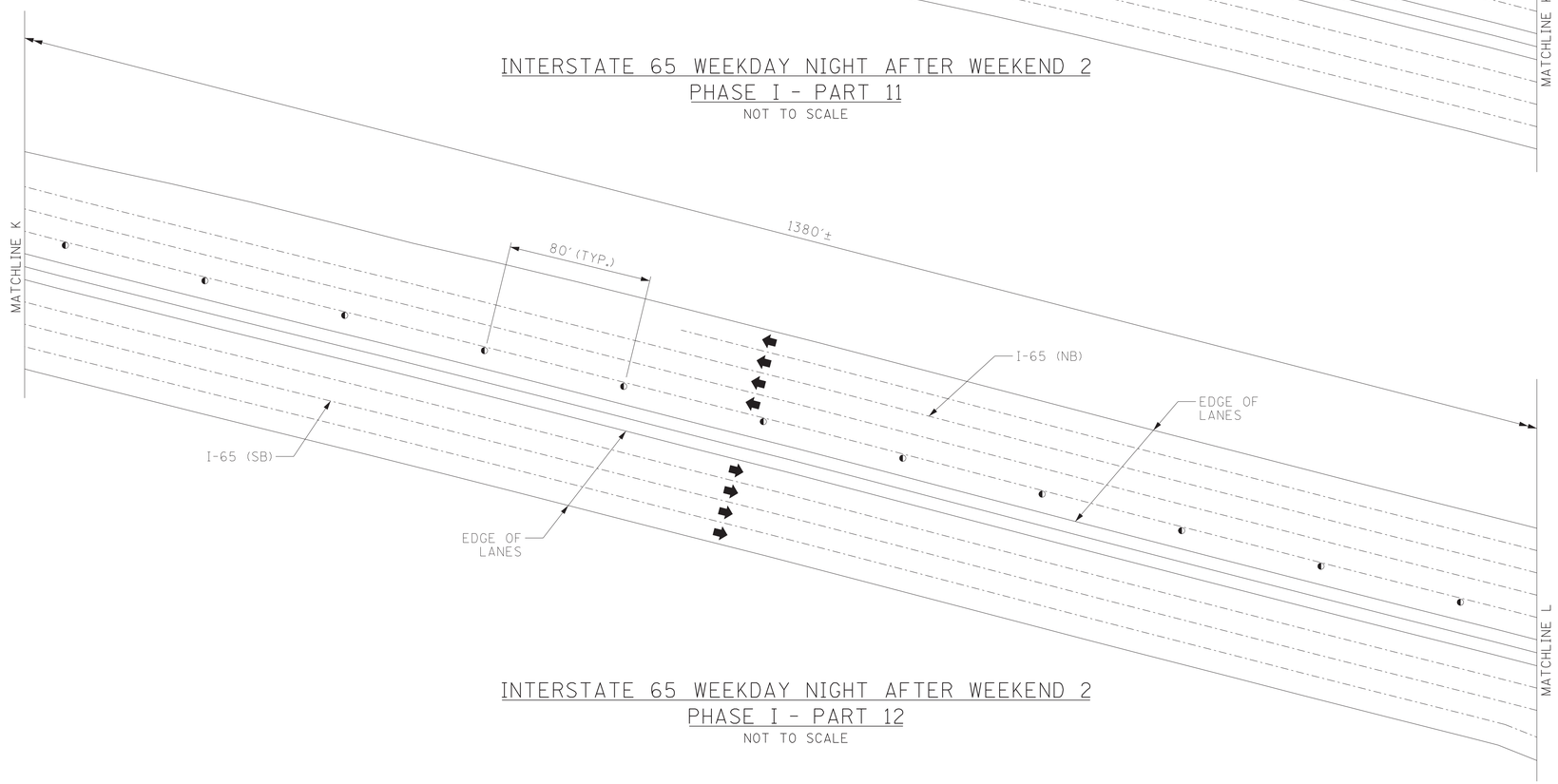

INTERSTATE 65 WEEKDAY NIGHT AFTER WEEKEND 2
PHASE I - PART 12
NOT TO SCALE

W4-2R
(48"X48")
A

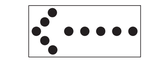

TYPE "C" ARROW BOARD
(96" X 48")
SEE STD. DWG. T-FAB-1
B

SEALED BY

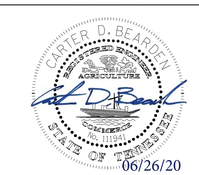

STATE OF TENNESSEE
DEPARTMENT OF TRANSPORTATION

TRAFFIC
CONTROL
PLANS

TYPE	YEAR	PROJECT NO.	SHEET NO.
CONST.	2020	19009-4191-04	24

TRAFFIC CONTROL LEGEND

- FLEXIBLE DRUMS (CHANNELIZING)
- SIGN

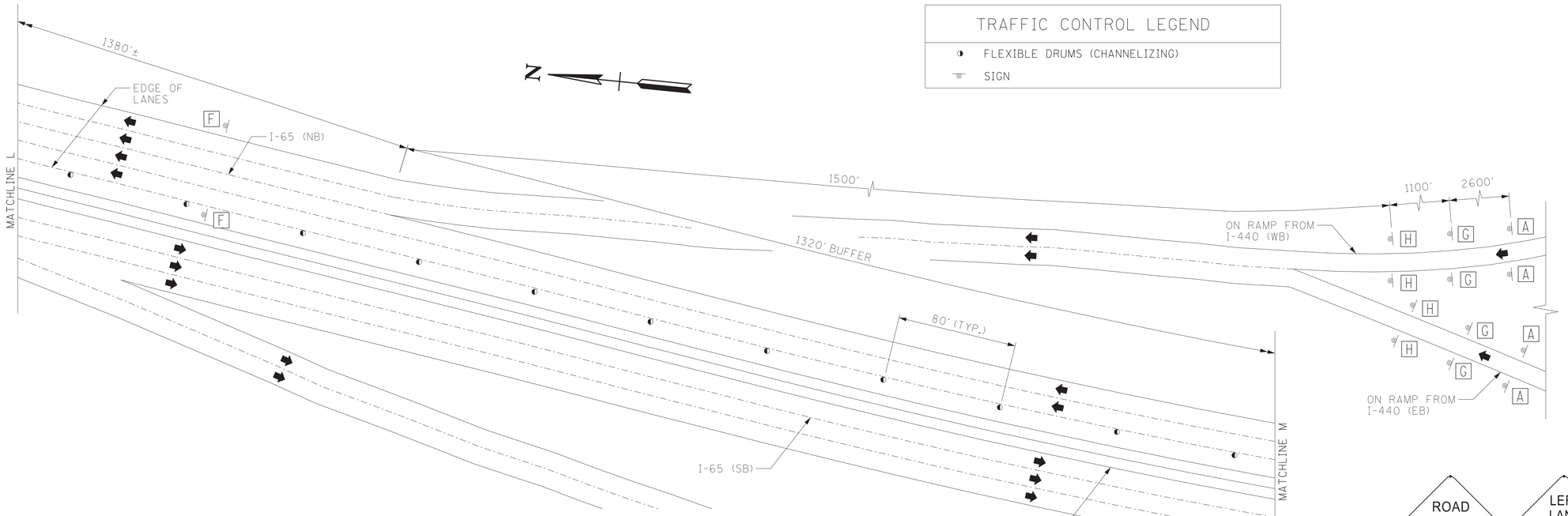

INTERSTATE 65 WEEKDAY NIGHT AFTER WEEKEND 2
PHASE I - PART 13
NOT TO SCALE

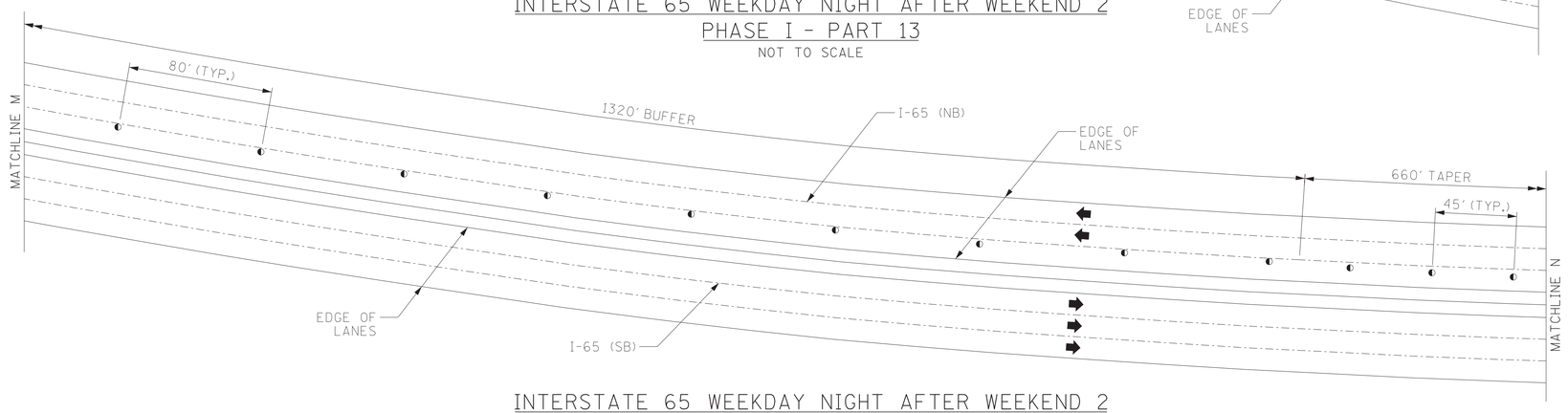

INTERSTATE 65 WEEKDAY NIGHT AFTER WEEKEND 2
PHASE I - PART 14
NOT TO SCALE

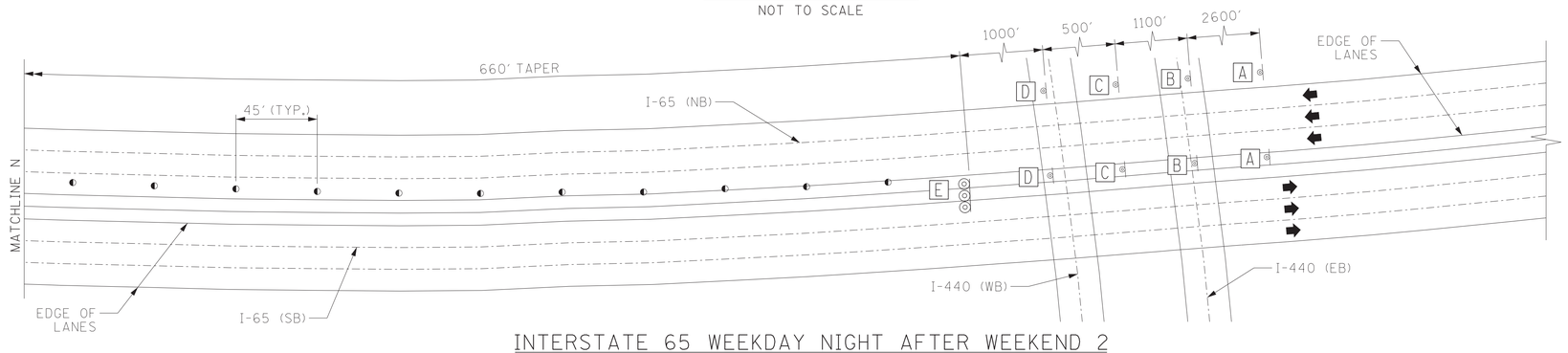

INTERSTATE 65 WEEKDAY NIGHT AFTER WEEKEND 2
PHASE I - PART 15
NOT TO SCALE

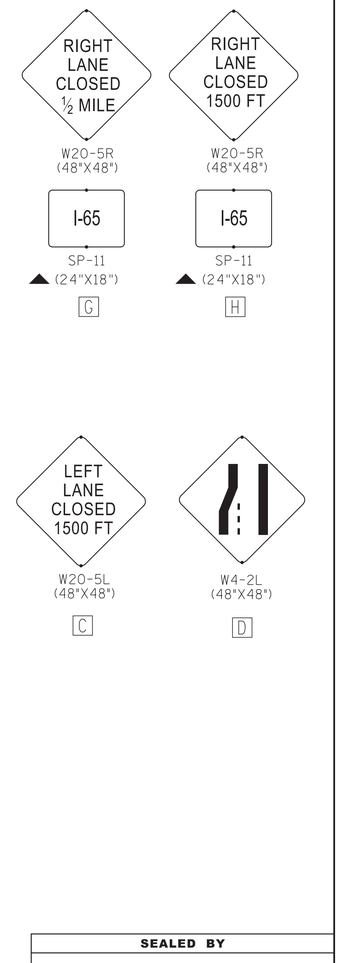

● NOTE: ERECTION OF SPEED REDUCTION SIGNS WILL ONLY BE PERMITTED UPON WRITTEN REQUEST BY THE CONTRACTOR AND WRITTEN APPROVAL BY THE STATE TRAFFIC ENGINEER.

▲ NOTE: SIGN SP-11 TO BE PLACED WITH SIGNS ON I-440 RAMPS.

SEALED BY

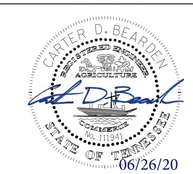

STATE OF TENNESSEE
DEPARTMENT OF TRANSPORTATION

TRAFFIC CONTROL PLANS

TYPE	YEAR	PROJECT NO.	SHEET NO.
CONST.	2020	19009-4191-04	25

TRAFFIC CONTROL LEGEND

- FLEXIBLE DRUMS (CHANNELIZING)
- SIGN
- FLASHING ARROW BOARD (TYPE C)

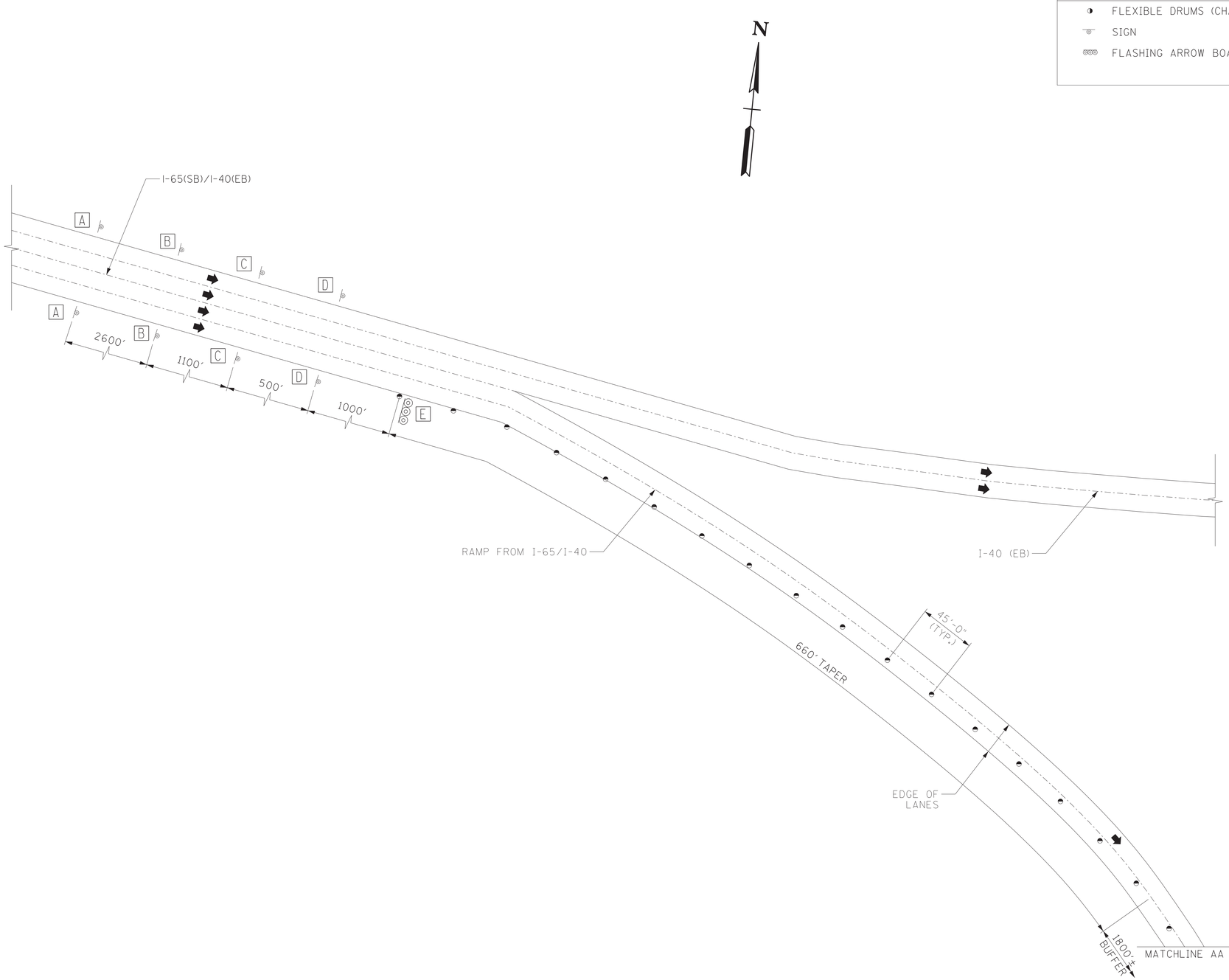

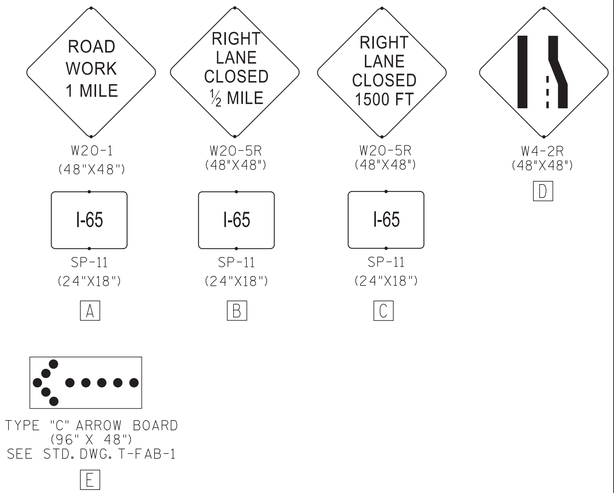

INTERSTATE 65 WEEKDAY NIGHT AFTER WEEKEND 2

PHASE II - PART 1

NOT TO SCALE

SEALED BY

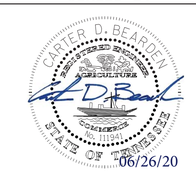

STATE OF TENNESSEE
DEPARTMENT OF TRANSPORTATION

TRAFFIC CONTROL PLANS

TYPE	YEAR	PROJECT NO.	SHEET NO.
CONST.	2020	19009-4191-04	26

TRAFFIC CONTROL LEGEND

- FLEXIBLE DRUMS (CHANNELIZING)
- SIGN
- FLASHING ARROW BOARD (TYPE C)

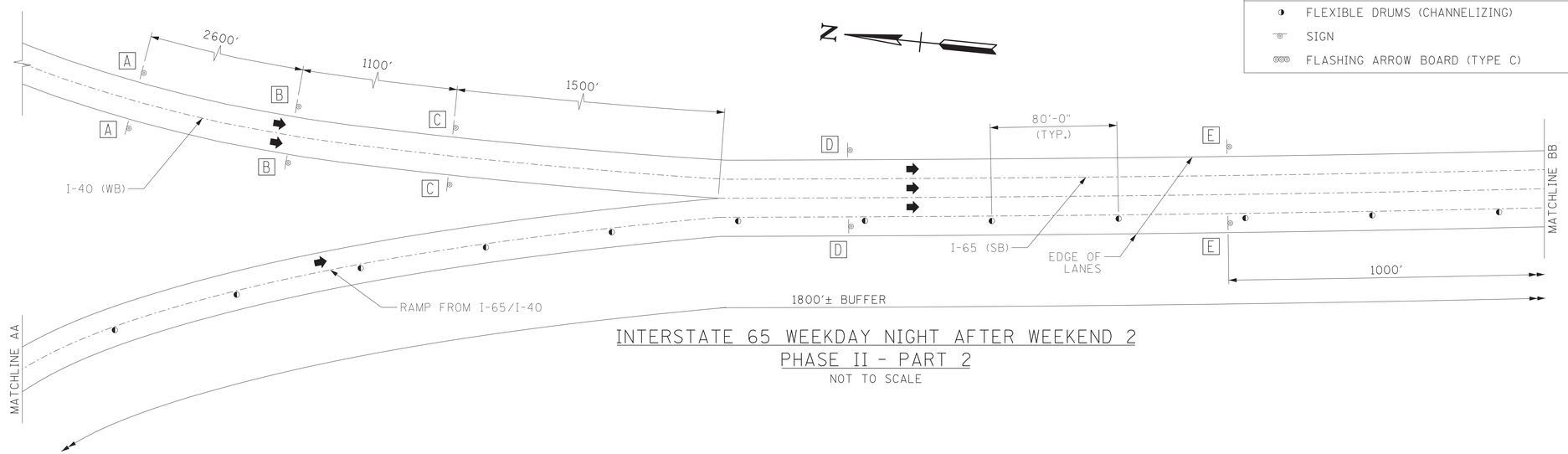

INTERSTATE 65 WEEKDAY NIGHT AFTER WEEKEND 2
PHASE II - PART 2
NOT TO SCALE

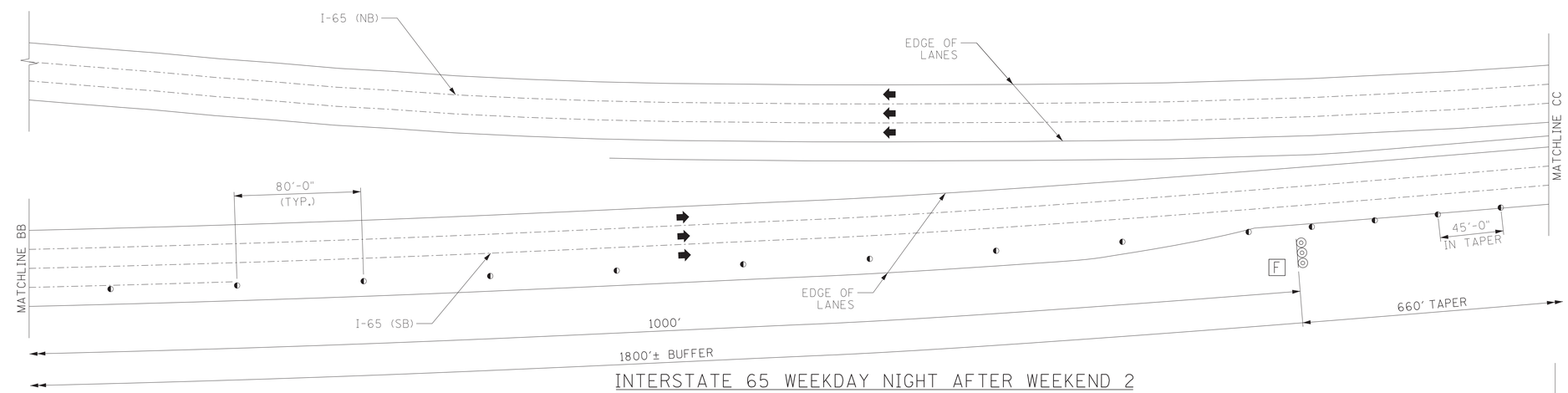

INTERSTATE 65 WEEKDAY NIGHT AFTER WEEKEND 2
PHASE II - PART 3
NOT TO SCALE

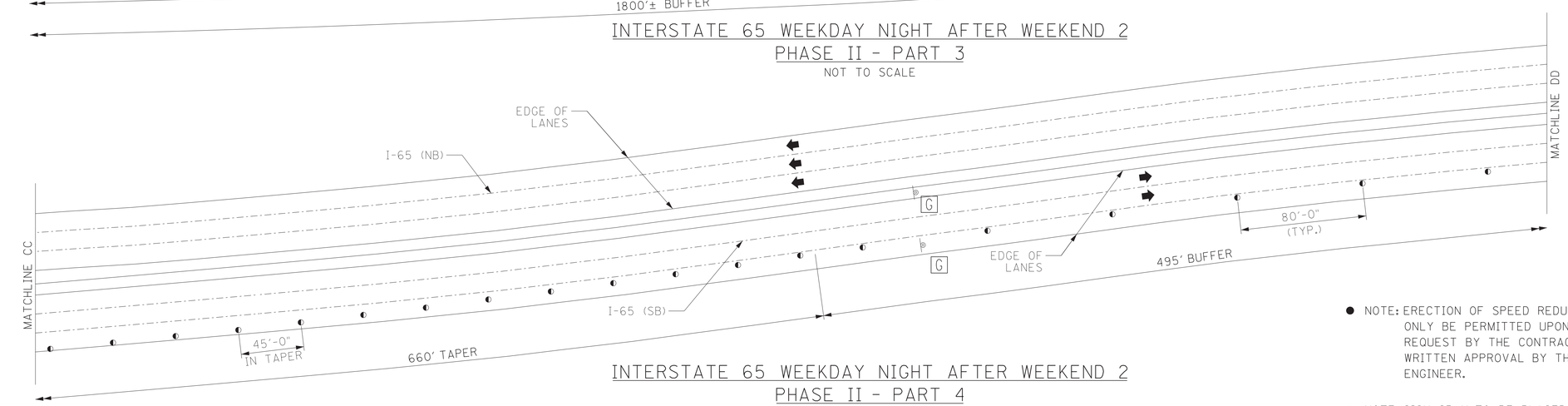

INTERSTATE 65 WEEKDAY NIGHT AFTER WEEKEND 2
PHASE II - PART 4
NOT TO SCALE

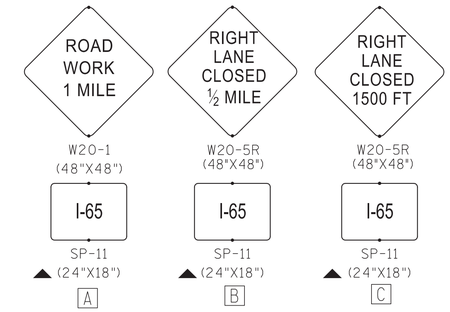

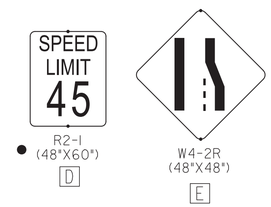

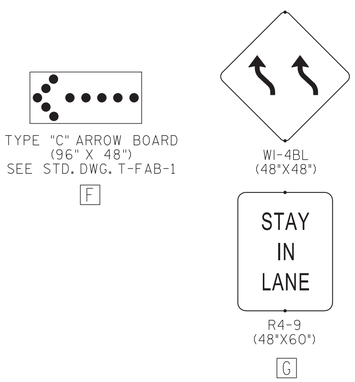

● NOTE: ERECTION OF SPEED REDUCTION SIGNS WILL ONLY BE PERMITTED UPON WRITTEN REQUEST BY THE CONTRACTOR AND WRITTEN APPROVAL BY THE STATE TRAFFIC ENGINEER.

▲ NOTE: SIGN SP-11 TO BE PLACED WITH SIGNS ON I-40 RAMP.

SEALED BY

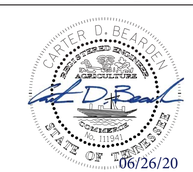

STATE OF TENNESSEE
DEPARTMENT OF TRANSPORTATION

TRAFFIC CONTROL PLANS

TYPE	YEAR	PROJECT NO.	SHEET NO.
CONST.	2020	19009-4191-04	27

TRAFFIC CONTROL LEGEND

- FLEXIBLE DRUMS (CHANNELIZING)
- SIGN

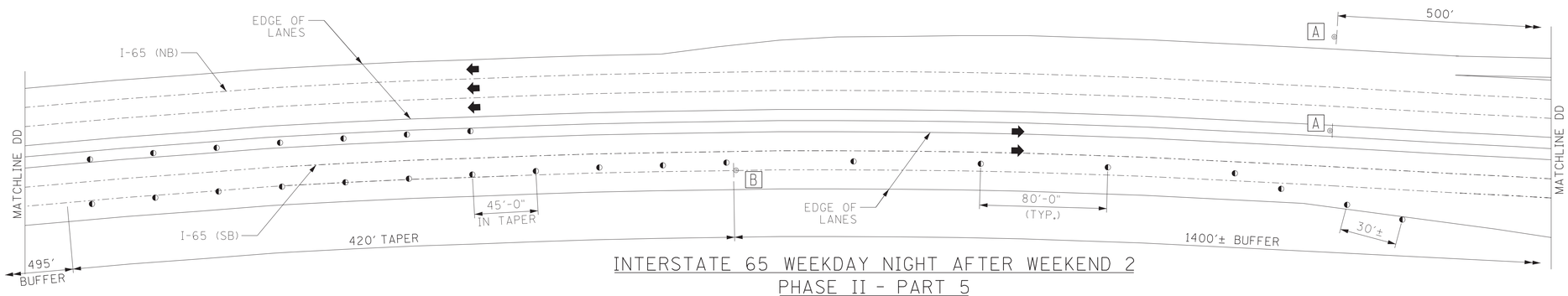

INTERSTATE 65 WEEKDAY NIGHT AFTER WEEKEND 2
PHASE II - PART 5
NOT TO SCALE

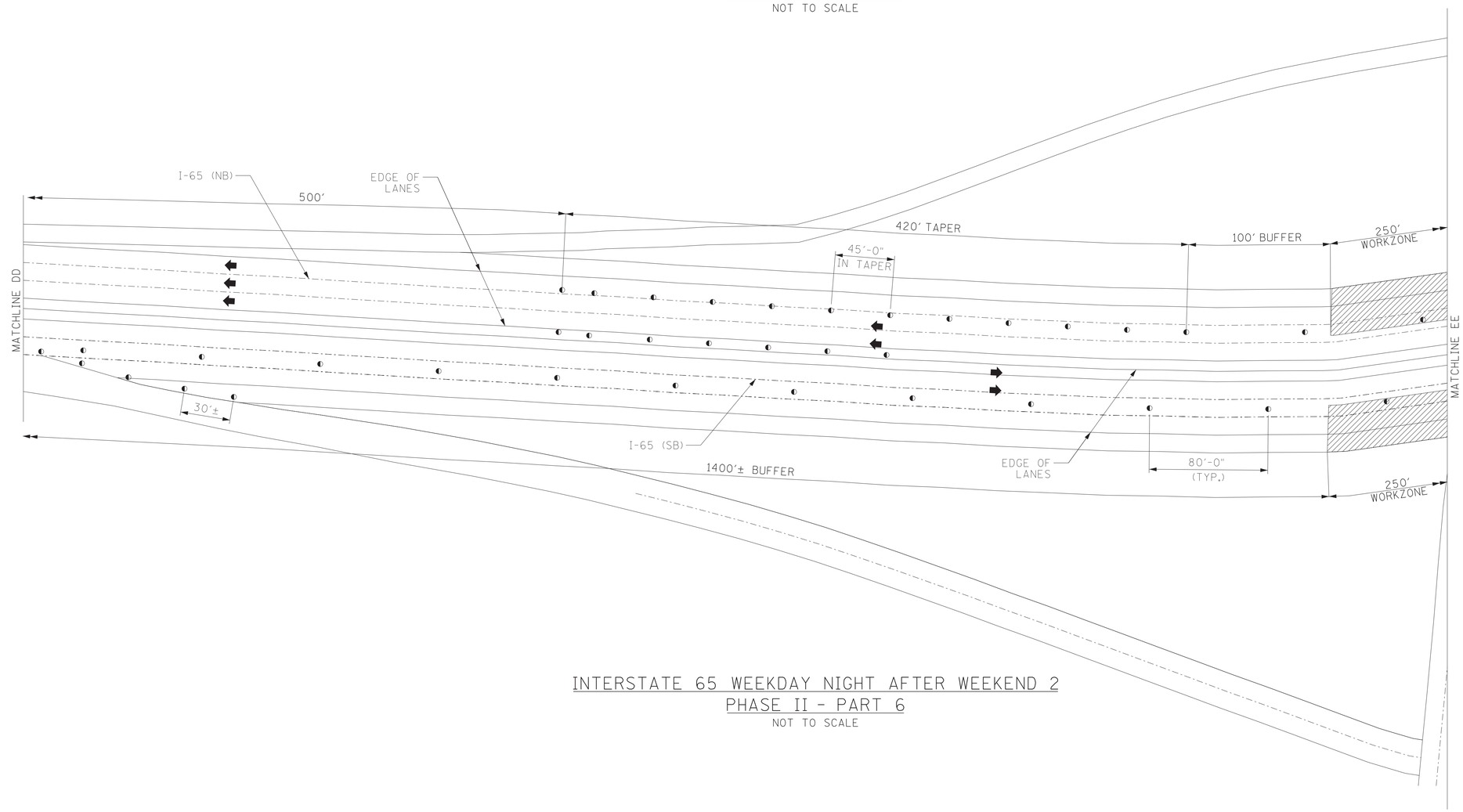

END ROAD WORK
G20-2
(48"X24")
A

EXIT OPEN
E5-2
(48"X36")
B

INTERSTATE 65 WEEKDAY NIGHT AFTER WEEKEND 2
PHASE II - PART 6
NOT TO SCALE

SEALED BY

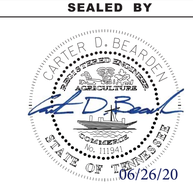

06/26/20

STATE OF TENNESSEE
DEPARTMENT OF TRANSPORTATION

TRAFFIC CONTROL PLANS

TYPE	YEAR	PROJECT NO.	SHEET NO.
CONST.	2020	19009-4191-04	28

TRAFFIC CONTROL LEGEND

- FLEXIBLE DRUMS (CHANNELIZING)
- SIGN

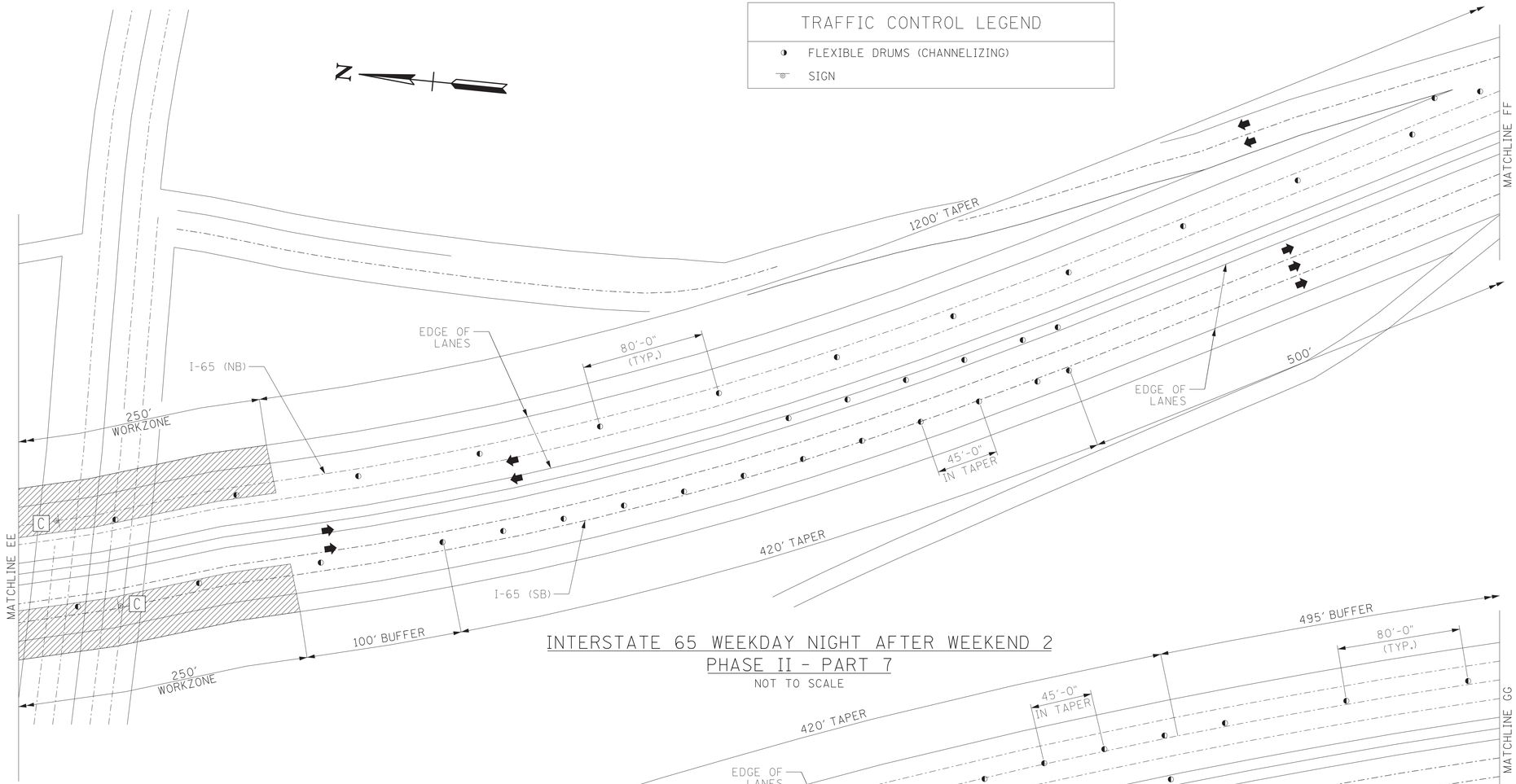

INTERSTATE 65 WEEKDAY NIGHT AFTER WEEKEND 2
PHASE II - PART 7
NOT TO SCALE

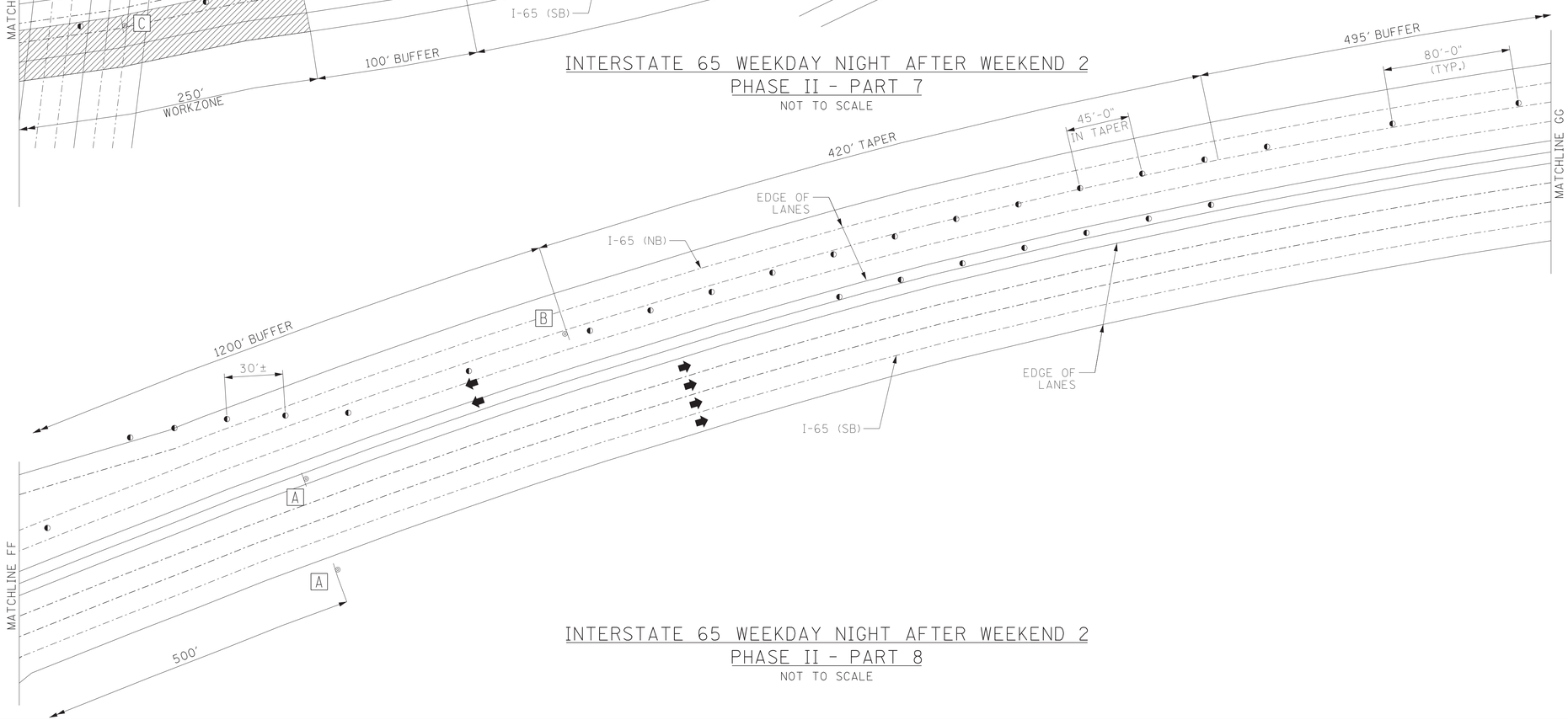

INTERSTATE 65 WEEKDAY NIGHT AFTER WEEKEND 2
PHASE II - PART 8
NOT TO SCALE

END ROAD WORK
G20-2
(48"X24")
A

EXIT OPEN
E5-2
(48"X36")
B

WI-4BR
(48"X48")

STAY IN LANE
R4-9
(48"X60")
C

SEALED BY

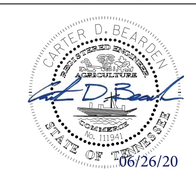

STATE OF TENNESSEE
DEPARTMENT OF TRANSPORTATION

TRAFFIC CONTROL PLANS

TYPE	YEAR	PROJECT NO.	SHEET NO.
CONST.	2020	19009-4191-04	29

TRAFFIC CONTROL LEGEND

- FLEXIBLE DRUMS (CHANNELIZING)
- SIGN
- FLASHING ARROW BOARD (TYPE C)

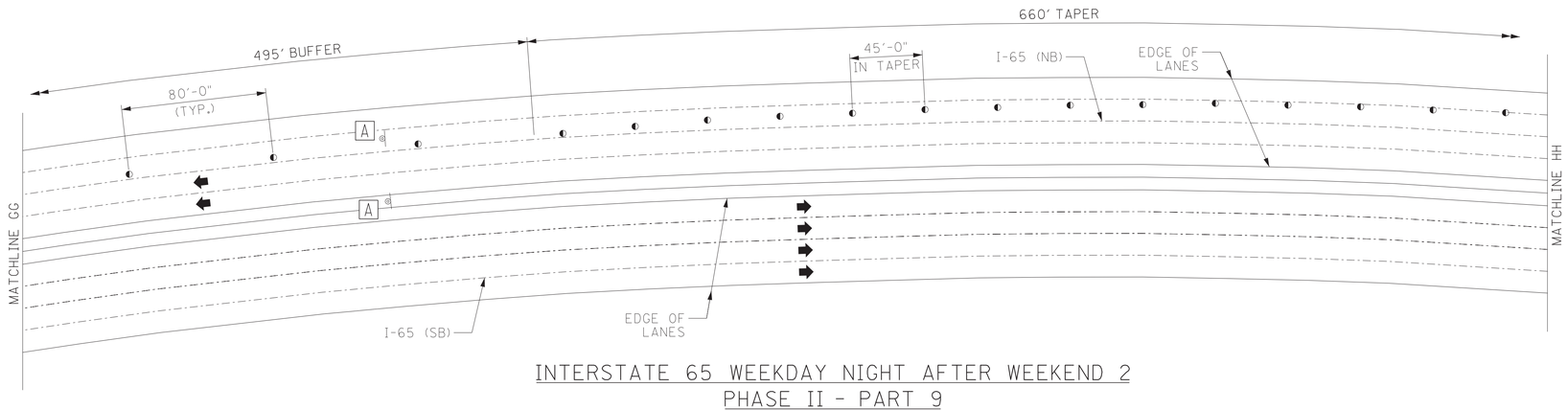

INTERSTATE 65 WEEKDAY NIGHT AFTER WEEKEND 2
PHASE II - PART 9
NOT TO SCALE

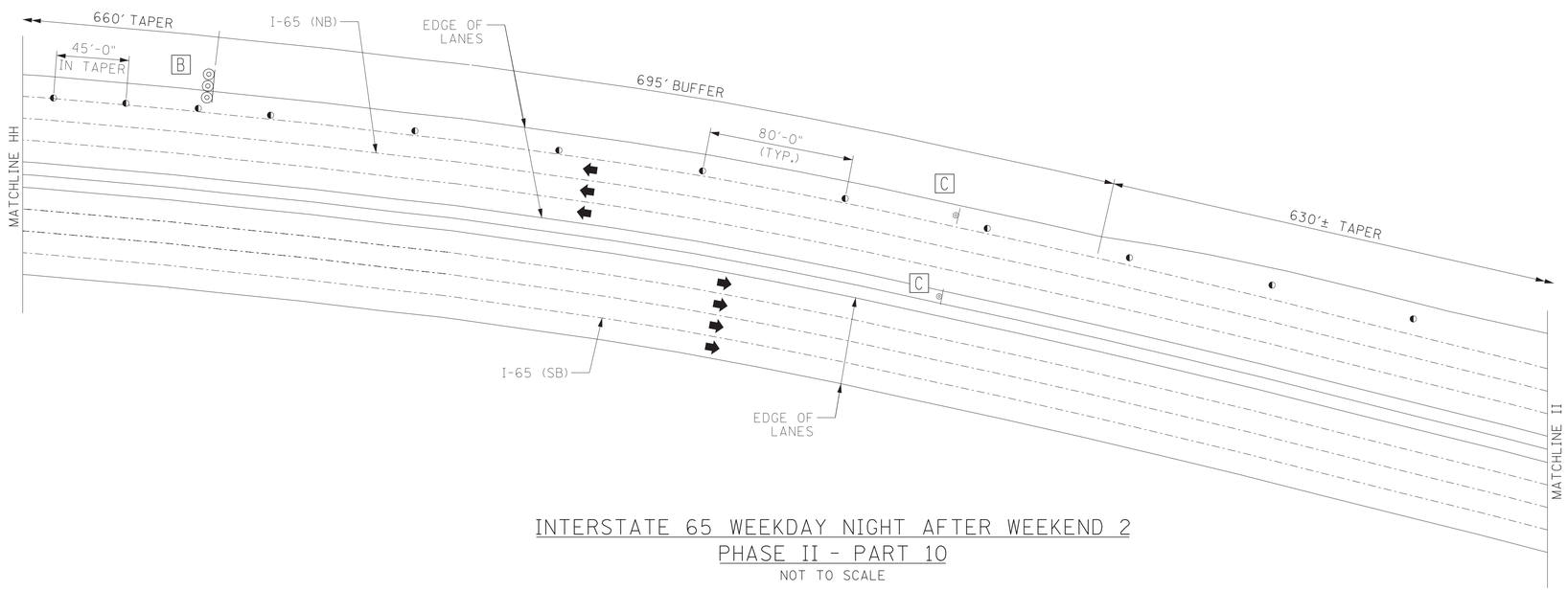

INTERSTATE 65 WEEKDAY NIGHT AFTER WEEKEND 2
PHASE II - PART 10
NOT TO SCALE

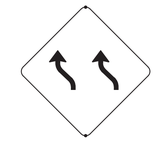

WI-4BL
(48"X48")

R4-9
(48"X60")

A

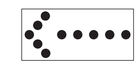

TYPE "C" ARROW BOARD
(96" X 48")
SEE STD. DWG. T-FAB-1

B

W4-2R
(48"X48")

C

SEALED BY

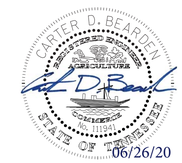

06/26/20

STATE OF TENNESSEE
DEPARTMENT OF TRANSPORTATION

TRAFFIC
CONTROL
PLANS

TYPE	YEAR	PROJECT NO.	SHEET NO.
CONST.	2020	19009-4191-04	30

TRAFFIC CONTROL LEGEND

- FLEXIBLE DRUMS (CHANNELIZING)
- SIGN
- FLASHING ARROW BOARD (TYPE C)

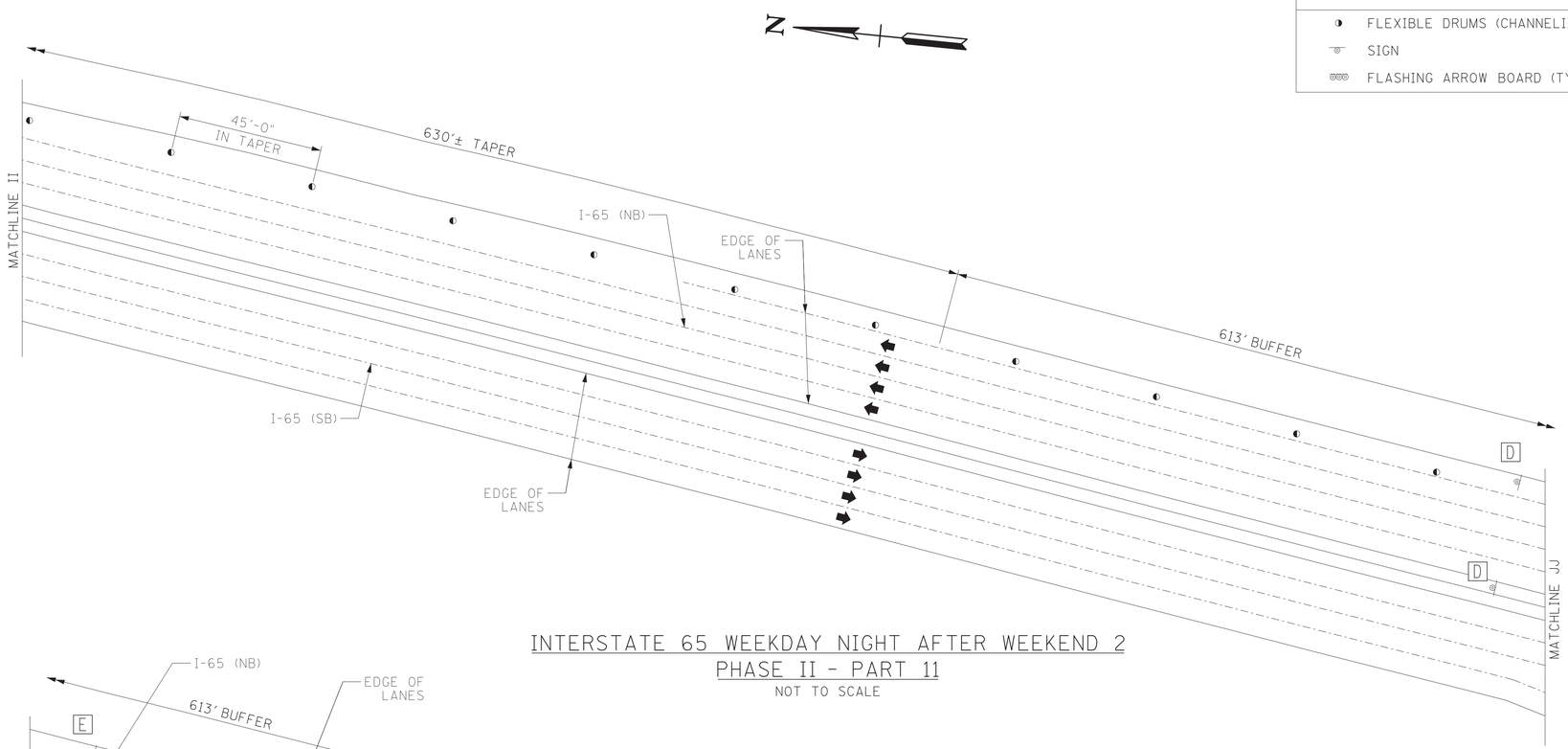

INTERSTATE 65 WEEKDAY NIGHT AFTER WEEKEND 2
PHASE II - PART 11
NOT TO SCALE

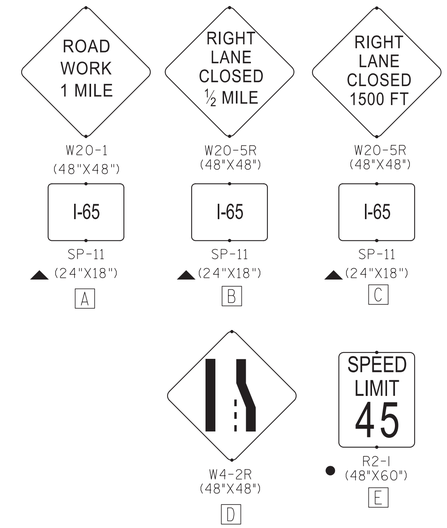

● NOTE: ERECTION OF SPEED REDUCTION SIGNS WILL ONLY BE PERMITTED UPON WRITTEN REQUEST BY THE CONTRACTOR AND WRITTEN APPROVAL BY THE STATE TRAFFIC ENGINEER.

▲ NOTE: SIGN SP-11 TO BE PLACED WITH SIGNS ON I-440 RAMPS.

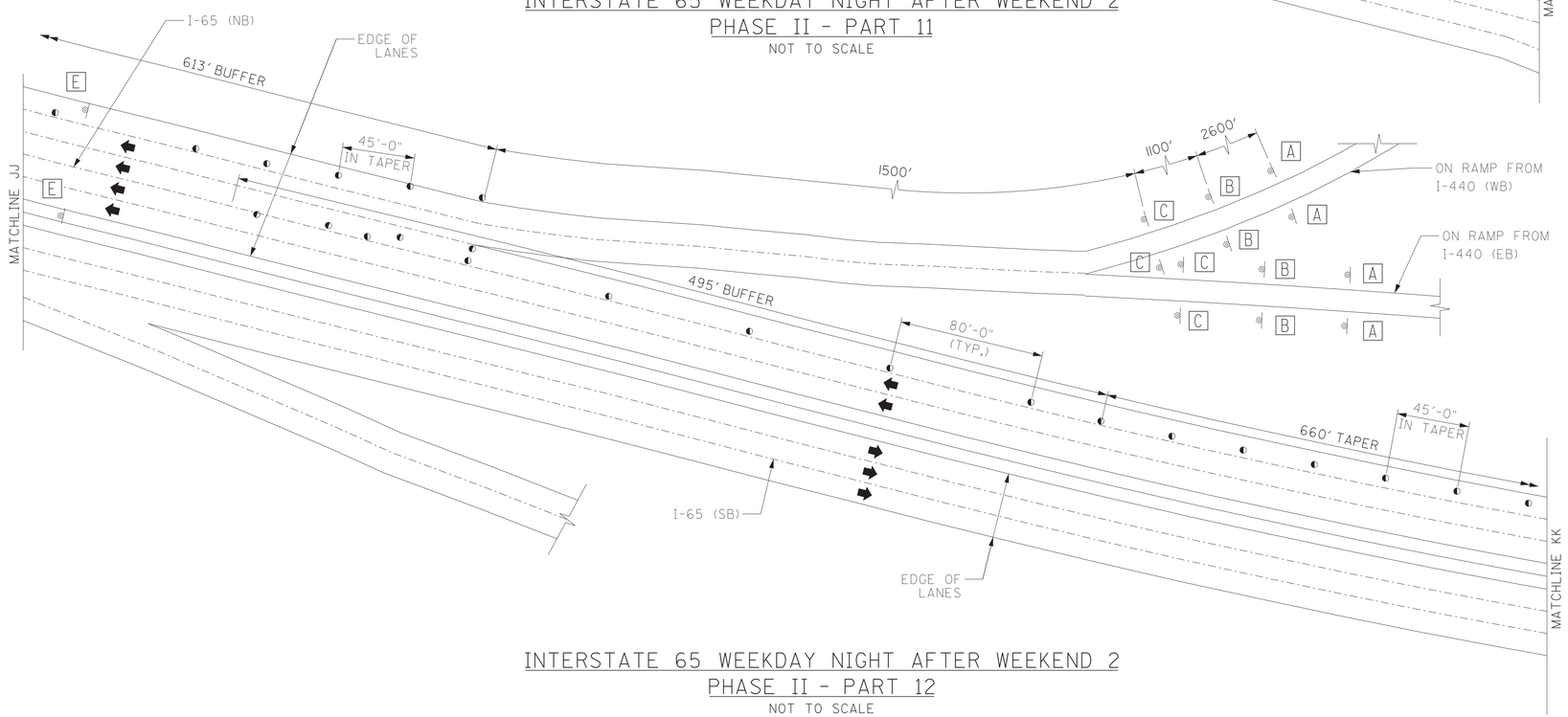

INTERSTATE 65 WEEKDAY NIGHT AFTER WEEKEND 2
PHASE II - PART 12
NOT TO SCALE

SEALED BY

STATE OF TENNESSEE
DEPARTMENT OF TRANSPORTATION

TRAFFIC CONTROL PLANS

TYPE	YEAR	PROJECT NO.	SHEET NO.
CONST.	2020	19009-4191-04	31

TRAFFIC CONTROL LEGEND

- FLEXIBLE DRUMS (CHANNELIZING)
- SIGN
- FLASHING ARROW BOARD (TYPE C)

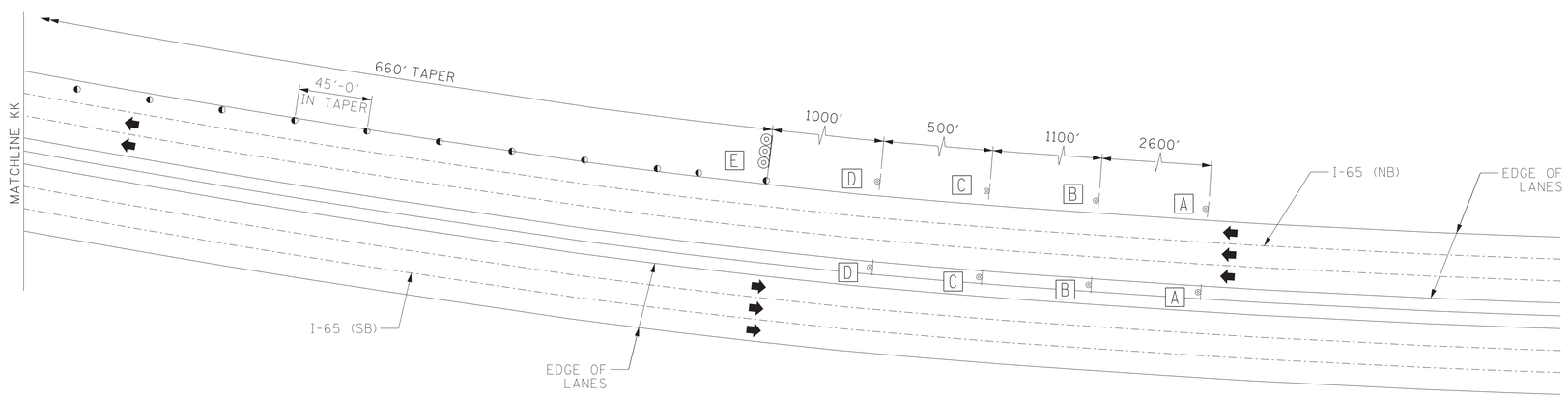

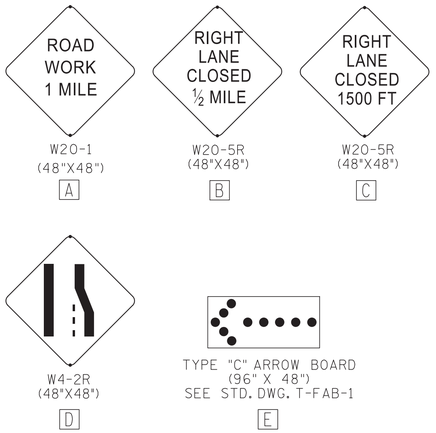

INTERSTATE 65 WEEKDAY NIGHT AFTER WEEKEND 2
PHASE II - PART 13

NOT TO SCALE

SEALED BY

STATE OF TENNESSEE
DEPARTMENT OF TRANSPORTATION

TRAFFIC CONTROL PLANS

TYPE	YEAR	PROJECT NO.	SHEET NO.
CONST.	2020	19009-4191-04	32

CONSTRUCTION WORK ZONE & TRAFFIC CONTROL NOTES

1. ADVANCED WARNING SIGNS SHALL NOT BE DISPLAYED MORE THAN FORTY-EIGHT (48) HOURS BEFORE PHYSICAL CONSTRUCTION BEGINS. SIGNS MAY BE ERECTED UP TO ONE WEEK BEFORE NEEDED, IF THE SIGN FACE IS FULLY COVERED.

2. IF THE CONTRACTOR MOVES OFF THE PROJECT, HE SHALL COVER OR REMOVE ALL UNNEEDED SIGNS AS DIRECTED BY THE ENGINEER. COSTS OF REMOVAL, COVERING, AND REINSTALLING SIGNS SHALL NOT BE MEASURED AND PAID FOR SEPARATELY, BUT ALL COSTS SHALL BE INCLUDED IN THE ORIGINAL UNIT PRICE BID FOR ITEM NO 712-06, SIGNS (CONSTRUCTION) PER SQUARE FOOT.

3. A LONG TERM BUT SPORADIC USE WARNING SIGN, SUCH AS A FLAGGER SIGN, MAY REMAIN IN PLACE WHEN NOT REQUIRED PROVIDED THE SIGN FACE IS FULLY COVERED.

4. TRAFFIC CONTROL DEVICES SHALL NOT BE DISPLAYED OR ERECTED UNLESS RELATED CONDITIONS ARE PRESENT NECESSITATING WARNING.

5. USE OF BARRICADES, PORTABLE BARRIER RAILS, VERTICAL PANELS, AND DRUMS SHALL BE LIMITED TO THE IMMEDIATE AREAS OF CONSTRUCTION WHERE A HAZARD IS PRESENT. THESE DEVICES SHALL NOT BE STORED ALONG THE ROADWAY WITHIN THIRTY (30) FEET OF THE EDGE OF THE TRAVELED WAY BEFORE OR AFTER USE UNLESS PROTECTED BY GUARDRAIL, BRIDGE RAIL, AND/OR BARRIERS INSTALLED FOR OTHER PURPOSES FOR ROADWAYS WITH CURRENT ADTS LESS THAN 1500 AND DESIGN SPEED OF LESS THAN 60 MPH. THIS DISTANCE SHALL INCREASE TO FORTY-FIVE (45) FEET FOR ROADWAYS WITH CURRENT ADTS OF 1500 OR GREATER AND DESIGN SPEED OF 60 MPH OR GREATER OR ON THE OUTSIDE OF A HORIZONTAL CURVE. THESE DEVICES SHALL BE REMOVED FROM THE CONSTRUCTION WORK ZONE WHEN THE ENGINEER DETERMINES THEY ARE NO LONGER NEEDED. WHERE THERE IS INSUFFICIENT RIGHT-OF-WAY TO PROVIDE FOR THIS REQUIRED SETBACK, THE CONTRACTOR SHALL DETERMINE THE ALTERNATE LOCATIONS AND REQUEST THE ENGINEERS APPROVAL TO USE THEM.

6. THE CONTRACTOR SHALL NOT BE PERMITTED TO PARK ANY VEHICLES OR CONSTRUCTION EQUIPMENT DURING PERIODS OF INACTIVITY, WITHIN THIRTY (30) FEET OF THE EDGE OF PAVEMENT WHEN THE LANE IS OPEN TO TRAFFIC UNLESS PROTECTED BY GUARDRAIL, BRIDGE RAIL, AND/OR BARRIERS INSTALLED FOR OTHER PURPOSES FOR ROADWAYS WITH CURRENT ADTS LESS THAN 1500 AND DESIGN SPEED OF LESS THAN 60 MPH. THIS DISTANCE SHALL BE INCREASED TO FORTY-FIVE (45) FEET FOR ROADWAYS WITH CURRENT ADTS OF 1500 OR GREATER AND DESIGN SPEED OF 60 MPH OR GREATER OR ON THE OUTSIDE OF A HORIZONTAL CURVE. PRIVATELY OWNED VEHICLES SHALL NOT BE ALLOWED TO PARK WITHIN THIRTY (30) FEET OF AN OPEN TRAFFIC LANE AT ANY TIME UNLESS PROTECTED AS DESCRIBED ABOVE FOR ROADWAYS WITH CURRENT ADTS LESS THAN 1500 AND DESIGN SPEED OF LESS THAN 60 MPH. THIS DISTANCE SHALL BE INCREASED TO FORTY-FIVE (45) FEET FOR ROADWAYS WITH CURRENT ADTS OF 1500 OR GREATER AND DESIGN SPEED OF 60 MPH OR GREATER OR ON THE OUTSIDE OF A HORIZONTAL CURVE. WHERE THERE IS INSUFFICIENT RIGHT-OF-WAY TO PROVIDE FOR THIS REQUIRED SETBACK, THE CONTRACTOR SHALL DETERMINE THE ALTERNATE LOCATIONS AND REQUEST THE ENGINEERS APPROVAL TO USE THEM.

7. ALL DETOUR AND CONSTRUCTION SIGNING SHALL BE IN STRICT ACCORDANCE WITH THE MANUAL ON UNIFORM TRAFFIC CONTROL DEVICES.

8. T.D.O.T. CONSTRUCTION OFFICE SHALL NOTIFY THE OVERWEIGHT AND PERMITS OFFICE OF LANE WIDTH RESTRICTIONS DURING CONSTRUCTION PRIOR TO ALLOWING THE CONTRACTOR TO INSTALL TRAFFIC CONTROL. PERMIT VEHICLES WILL NOT BE ALLOWED UNTIL CONSTRUCTION IS COMPLETE AND FULL LANE WIDTHS HAVE BEEN RESTORED.

ADDITIONAL TRAFFIC CONTROL NOTES

ADVANCED WARNING SIGNS TO BE PLACED PRIOR TO CONSTRUCTION AND REMAIN IN PLACE UNTIL THE COMPLETION OF THIS PROJECT.

THE TRAFFIC CONTROL PLAN DOES NOT RELIEVE THE CONTRACTOR OF THE RESPONSIBILITY OF INSTALLING TRAFFIC CONTROL DEVICES IN ACCORDANCE WITH THE CURRENT EDITION OF THE "MANUAL ON UNIFORM TRAFFIC CONTROL DEVICES".

IF ADDITIONAL SIGNS ARE DEEMED NECESSARY BY THE ENGINEER, THEY SHALL BE FURNISHED AND INSTALLED AT THE UNIT PRICE BID, ITEM NO. 712-06 SIGNS (CONSTRUCTION) S.F.

MISCELLANEOUS NOTES

1. NOTHING IN THE GENERAL NOTES OR SPECIAL PROVISIONS SHALL RELIEVE THE CONTRACTOR FROM HIS RESPONSIBILITIES TOWARD THE SAFETY AND CONVENIENCE OF THE GENERAL PUBLIC AND THE BUSINESSES ALONG THE PROPOSED CONSTRUCTION AREA.

2. THE CONTRACTOR SHALL BE RESPONSIBLE FOR ANY DAMAGE OR LOSS OF EXISTING SIGNS DURING CONSTRUCTION. EXISTING SIGNS SHALL BE REMOVED AND REPLACED AS NECESSARY.

SPECIAL NOTES

1. TRAFFIC CONTROL PLAN - SEE SHEETS 5 THROUGH 32 AND STD. DWG. NOS. T-WZ-12, T-WZ-13, T-WZ-14, T-WZ-16, AND T-WZ-18.

2. SEE SP108B FOR EXACT CLOSURE INFORMATION

(1) THIS PROJECT AND PROJECT PIN 117125.00 ARE BUNDLED TOGETHER AND SHARE THE QUANTITY FOR THIS ITEM.

(2) 712-06 INCLUDES THE COST OF REMOVAL, COVERING, AND REINSTALLING SIGNS. ALL UNNEEDED DETOUR SIGNS SHALL BE COVERED OR REMOVED AS DIRECTED BY THE ENGINEER.

(3) 712-08.10 VALUE BASED ON ASSUMED 6 TRUCKS USED FOR 6 24 HOUR DAYS. SEE SPECIAL PROVISION SP712PTQ FOR MORE DETAIL.

TRAFFIC CONTROL SIGN QUANTITIES

	TYPE	DESCRIPTION	SIZE	EACH	S.F.
	E5-2	EXIT OPEN	48"X36"	2	24
	G20-2	END ROAD WORK	48"X24"	4	32
	M1-1	INTERSTATE 65	36"X36"	21	189
	M3-1	NORTH - SUPPLEMENTAL	36"X18"	10	45
	M3-3	SOUTH - SUPPLEMENTAL	36"X18"	11	50
	M4-5	TO - SUPPLEMENTAL	24"X12"	24	48
	M4-8	DETOUR	24"X12"	37	74
	M4-8	DETOUR	30"X15"	21	66
	M4-8A	END DETOUR	24"X18"	4	12
	M4-9R	DETOUR WITH ARROW - RIGHT	48"X36"	2	24
	M6-1L	DIRECTIONAL ARROW - LT	21"X15"	11	24
	M6-2L	DIRECTIONAL ARROW - 45 DEGREES LT	30"X21"	6	26
	M6-1R	DIRECTIONAL ARROW - RT	21"X15"	12	26
	M6-2R	DIRECTIONAL ARROW - 45 DEGREES RT	30"X21"	5	22
	M6-3	DIRECTIONAL ARROW - STRAIGHT	21"X15"	14	31
	M6-3	DIRECTIONAL ARROW - STRAIGHT	30"X21"	10	44
	R2-1	SPEED LIMIT 45	48"X60"	4	80
	R4-9	STAY IN LANE	48"X60"	6	120
	R11-2	ROAD CLOSED	48"X30"	4	40
	R11-3A	ROAD CLOSED 1 MILES LOCAL ONLY	60"X30"	1	13
	R11-3A	ROAD CLOSED 1/2 MILES LOCAL ONLY	60"X30"	2	25
	R11-3A	ROAD CLOSED 1/4 MILES LOCAL ONLY	60"X30"	2	25
	SP-1	BRIDGE CLOSED 4 1/2 MILES AHEAD FOLLOW DETOUR ROUTE	312"X120"	3	780
	SP-2	BRIDGE CLOSED 2 MILES AHEAD FOLLOW DETOUR ROUTE	312"X120"	4	1040
	SP-3	BRIDGE CLOSED 1 MILES AHEAD FOLLOW DETOUR ROUTE	312"X120"	2	520
	SP-4	BRIDGE CLOSED 4 MILES AHEAD FOLLOW DETOUR ROUTE	312"X120"	1	260
	SP-5	BRIDGE CLOSED 3 MILES AHEAD FOLLOW DETOUR ROUTE	312"X120"	2	520
	SP-6	BRIDGE CLOSED 1 1/2 MILES AHEAD FOLLOW DETOUR ROUTE	312"X120"	1	260
	SP-7	BRIDGE CLOSED 2 1/2 MILES AHEAD FOLLOW DETOUR ROUTE	312"X120"	1	260
	SP-8	BRIDGE CLOSED 5 1/2 MILES AHEAD FOLLOW DETOUR ROUTE	312"X120"	3	780
	SP-9	WEDGEWOOD AVE UNDER I-65 ROAD CLOSED	60"X30"	15	188
	SP-10	WEDGEWOOD AVE	60"X30"	24	300
	SP-11	I-65	24"X18"	26	78
*	SP-12		60"X30"	1	13
*	SP-13		60"X30"	1	13
	W1-4BL	2 LANE SHIFT - LEFT	48"X48"	4	64
	W1-4BR	2 LANE SHIFT - RIGHT	48"X48"	4	64
	W4-2L	LANE CLOSED MERGE LEFT - SYMBOL	48"X48"	8	128
	W4-2R	LANE CLOSED MERGE RIGHT - SYMBOL	48"X48"	10	160
	W20-1	ROAD WORK 1 MILE	48"X48"	10	160
	W20-1	ROAD WORK 1/2 MILE	48"X48"	4	64
	W20-2	DETOUR AHEAD	48"X48"	2	32
	W20-3	ROAD CLOSED 1/2 MILE	48"X48"	4	64
	W20-3	ROAD CLOSED AHEAD	48"X48"	4	64
	W20-5L	LEFT LANE CLOSED 1/2 MILE	48"X48"	10	160
	W20-5L	LEFT LANE CLOSED 1500 FEET	48"X48"	10	160
	W20-5L	RIGHT LANE CLOSED 1/2 MILE	48"X48"	10	160
	W20-5L	RIGHT LANE CLOSED 1500 FEET	48"X48"	10	160
	W21-5R	RIGHT SHOULDER CLOSED	48"X48"	4	64
	W21-5R	RIGHT SHOULDER CLOSED 1500 FEET	48"X48"	4	64
		TOTAL			7617

* NOTE: EXACT LANGUAGE AND LOCATION OF BUS STOP SIGNS TO BE DETERMINED BY ENGINEER.

TRAFFIC CONTROL QUANTITIES

	ITEM NO.	DESCRIPTION	UNIT	QUANTITY
	705-20.25	TEMPORARY CRASH CUSHION (MASH TL-3)	EACH	2
(1)	712-01	TRAFFIC CONTROL	LS	0.5
	712-02.02	INTERCONNECTED PORTABLE BARRIER RAIL	L.F.	800
	712-04.01	FLEXIBLE DRUMS (CHANNELIZING)	EACH	346
	712-04.50	PORTABLE BARRIER RAIL DELINEATOR	EACH	27
(2)	712-06	SIGNS (CONSTRUCTION)	S.F.	7617
	712-07.03	TEMPORARY BARRICADES (TYPE III)	L.F.	216
	712-08.03	ARROW BOARD (TYPE C)	EACH	6
(3)	712-08.10	MOBILE MESSAGE SIGN UNIT WITH ATTENUATOR	HOURS	864
	712-09.02	REMOVABLE PAVEMENT MARKING (8" BARRIER LINE)	L.F.	11317
	712-09.08	REMOVABLE PAVEMENT MARKING (6" LINE)	L.F.	2292
	713-16.04	CHANGEABLE MESSAGE SIGN UNIT	EACH	8
(1)	717-01	MOBILIZATION	LS	0.5

SEALED BY

STATE OF TENNESSEE
DEPARTMENT OF TRANSPORTATION

TRAFFIC CONTROL QUANTITIES AND NOTES

CONST. NO. 19009-4191-04

PROJECT NO.	YEAR	SHEET NO.
19009-4191-04	2020	

REVISIONS

NO.	DATE	BY	BRIEF DESCRIPTION

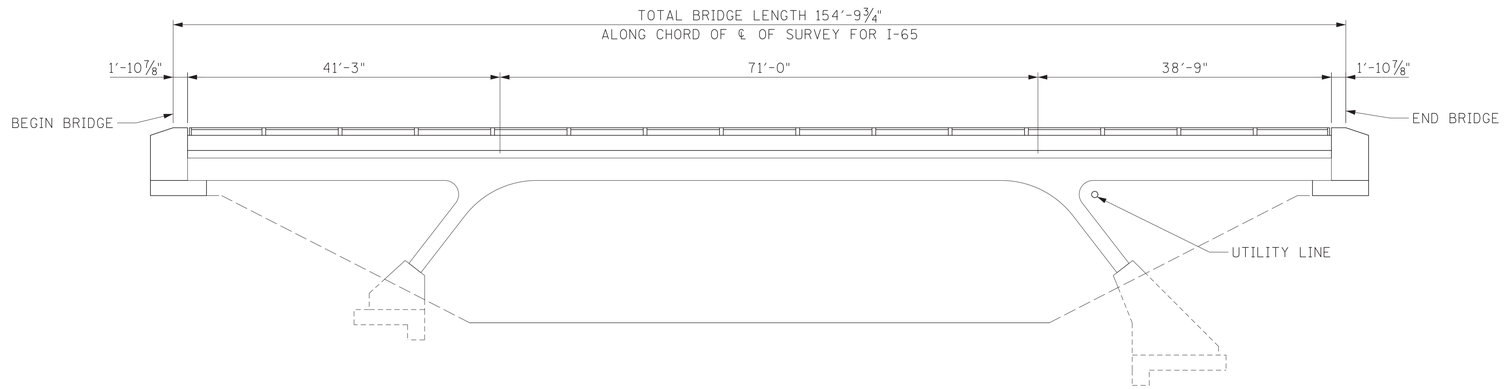

ELEVATION

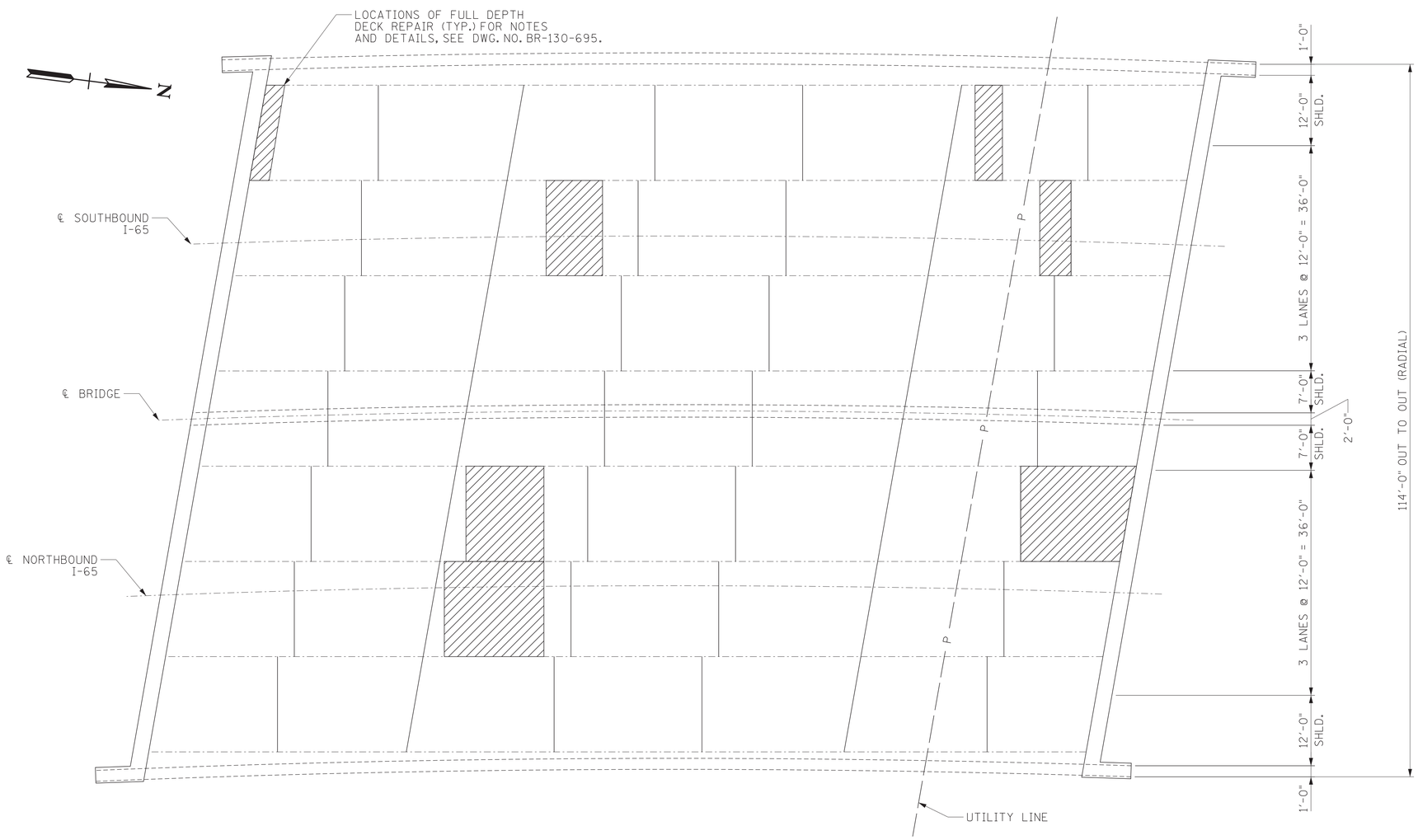

PLAN

SCOPE OF WORK

WEEKEND #1

1. PROVIDE TRAFFIC CONTROL UTILIZING DETOURS (WEEKEND CLOSURE), LANE CLOSURES AND SHOULDER CLOSURES. SEE DETAILS ON SHEETS 5-6, 16, & 32.
2. REPLACE FIELD DESIGNATED PORTIONS OF THE PARAPETS AND CANTILEVERS. FOR NOTES AND DETAILS, SEE DWG. NO. BR-130-693.
3. REMOVE EXISTING STEEL TUBING FOR THE FULL LENGTH ON BOTH SIDES OF THE BRIDGE. FOR NOTES AND DETAILS, SEE DWG. NO. BR-130-693.
4. POUR RAIL EXTENSION (GLARE SCREEN) FOR THE FULL LENGTH ON BOTH SIDES OF THE BRIDGE. FOR NOTES AND DETAILS, SEE DWG. NO. BR-130-693.
5. CLEAN AND PRIME EXPOSED PORTIONS OF BEARINGS, END DIAPHRAGMS AND BEAM ENDS NEAR ABUTMENTS. FOR NOTES, SEE DWG. NOS. BR-130-685 & BR-130-686.

WEEKEND #2

1. PROVIDE TRAFFIC CONTROL UTILIZING DETOURS (WEEKEND CLOSURE) AND LANE CLOSURES. SEE DETAILS ON SHEETS 7-16 & 32.
2. PERFORM FULL AND PARTIAL DEPTH DECK REPAIR AT FIELD DESIGNATED LOCATIONS. FOR NOTES AND DETAILS, SEE DWG. NO. BR-130-695.
3. REMOVE AND REPLACE THE CENTER DECK BAY AND MEDIAN BARRIER ON I-65. FOR NOTES AND DETAILS, SEE DWG. NO. BR-130-692.
4. REMOVE AND REPLACE EXISTING ASPHALT WEARING SURFACE. FOR NOTES AND DETAILS, SEE DWG. NO. BR-130-695.
5. PERFORM SPALL REPAIR AT FIELD DESIGNATED LOCATIONS. FOR NOTES AND DETAILS, SEE DWG. NO. BR-130-695.

WEEKEND #3

1. PROVIDE TRAFFIC CONTROL UTILIZING DETOURS (WEEKEND CLOSURE) AND LANE CLOSURES. SEE DETAILS ON SHEETS 7-16 & 32.
2. PERFORM FULL DEPTH BACKWALL REMOVAL AND REPLACEMENT AT BOTH ABUTMENTS. SAW CUT DECK AND APPROACH. USE EXCAVATION ON APPROACHES AS FORM FOR NEW BACKWALL. FOR NOTES AND DETAILS, SEE DWG. NO. BR-130-694.
4. CLEAN AND PRIME REMAINING PORTION OF BEARINGS, END DIAPHRAGMS AND BEAM ENDS AT BOTH ABUTMENTS. FOR NOTES, SEE DWG. NO. BR-130-685 & BR-130-686.
5. TEXTURE COAT THE PARAPETS AND MEDIAN BARRIER AS SHOWN IN DETAILS ON DWG. NO. BR-130-685.

☞ NOTE: SEE SP108B FOR EXACT DETAILS OF SCHEDULE, WORK TO BE PERFORMED AND CLOSURE INFORMATION

STATE OF TENNESSEE
DEPARTMENT OF TRANSPORTATION

LAYOUT OF BRIDGE TO BE REPAIRED

BRIDGE NO. 19-I0065-7.27
FEDERAL I.D. 19I00650029
I-65 OVER WEDGEWOOD AVE

DAVIDSON COUNTY
2020

CARTER D. BEARDEN
REGISTERED ENGINEER
AGRICULTURE
No. 111931
STATE OF TENNESSEE
06/26/20

DESIGNED BY	Lane M. Decker	DATE	06/01/2020
DRAWN BY	Lane M. Decker	DATE	06/01/2020
SUPERVISED BY	Benjamin E. Graves	DATE	06/08/2020
CHECKED BY	Carter D. Bearden	DATE	06/26/2020

HDR

BR-130-684

CONST. NO. 19009-4191-04

PROJECT NO.	YEAR	SHEET NO.
19009-4191-04	2020	

REVISIONS

NO.	DATE	BY	BRIEF DESCRIPTION

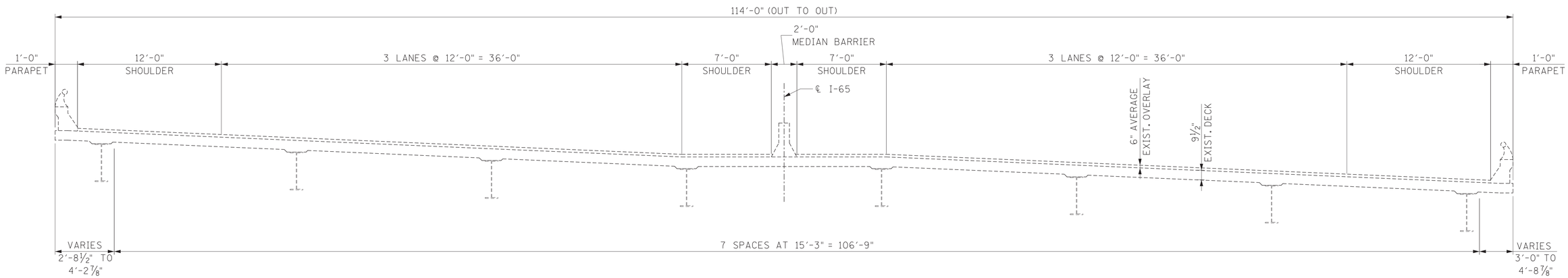

EXISTING TYPICAL SECTION

1/4" = 1'-0"

STATE OF TENNESSEE
DEPARTMENT OF TRANSPORTATION

EXISTING TYPICAL SECTION

BRIDGE NO. 19-I0065-7.27
FEDERAL I.D. 19I00650029
I-65 OVER WEDGEWOOD AVE

DAVIDSON COUNTY
2020

BR-130-687

CARTER D. BEARDEN
REGISTERED ENGINEER
AGRICULTURE
CIVIL
COLLEGE
No. 111601
STATE OF TENNESSEE
06/26/20

DESIGNED BY	Lane M. Decker	DATE	06/01/2020
DRAWN BY	Lane M. Decker	DATE	06/01/2020
SUPERVISED BY	Benjamin E. Graves	DATE	06/08/2020
CHECKED BY	Carter D. Bearden	DATE	06/26/2020

HDR

CONST. NO. 19009-4191-04

PROJECT NO.	YEAR	SHEET NO.
19009-4191-04	2020	

REVISIONS

NO.	DATE	BY	BRIEF DESCRIPTION

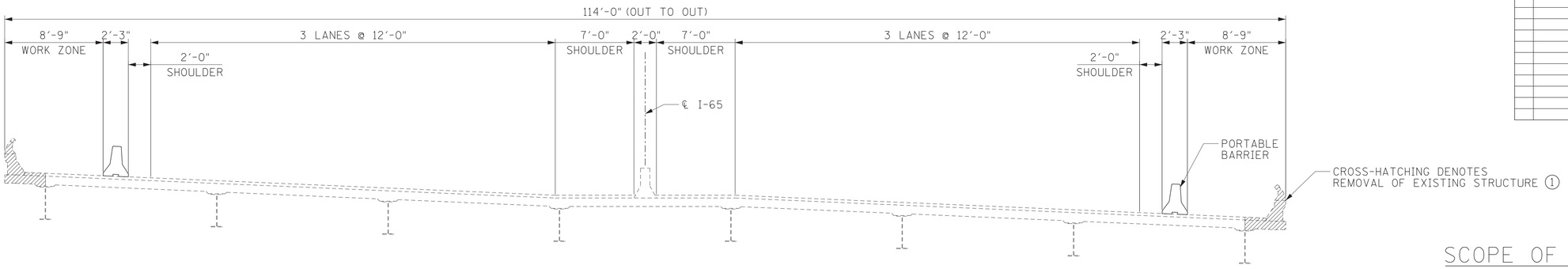

WEEKEND 1 DEMOLITION
TYPICAL SECTION

3/16" = 1'-0"

SCOPE OF WORK

1. PROVIDE TRAFFIC CONTROL UTILIZING DETOURS (WEEKEND CLOSURE), LANE CLOSURES AND SHOULDER CLOSURES. SEE DETAILS ON SHEETS 5-6, 16, & 32.
2. REPLACE FIELD DESIGNATED PORTIONS OF THE PARAPETS AND CANTILEVERS. FOR NOTES AND DETAILS, SEE DWG. NO. BR-130-693.
3. REMOVE EXISTING STEEL TUBING FOR THE FULL LENGTH ON BOTH SIDES OF THE BRIDGE. FOR NOTES AND DETAILS, SEE DWG. NO. BR-130-693.
4. POUR RAIL EXTENSION (GLARE SCREEN) FOR THE FULL LENGTH ON BOTH SIDES OF THE BRIDGE. FOR NOTES AND DETAILS, SEE DWG. NO. BR-130-693.
5. CLEAN AND PRIME EXPOSED PORTIONS OF BEARINGS, END DIAPHRAGMS AND BEAM ENDS NEAR ABUTMENTS. FOR NOTES, SEE DWG. NOS. BR-130-685 & BR-130-686.

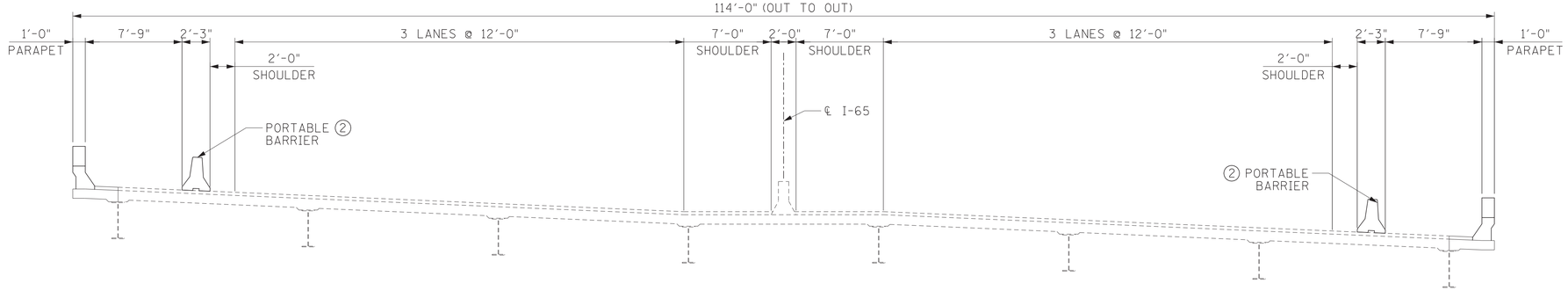

WEEKEND 1 CONSTRUCTION
TYPICAL SECTION

3/16" = 1'-0"

1. PARAPET AND CANTILEVER REPLACEMENT. FOR MORE DETAIL OF FULL REPLACEMENT, SEE DWG. NO. BR-130-693. FOR MORE DETAIL OF PARAPET EXTENSION, SEE DWG. NO. BR-130-693.

2. PORTABLE BARRIER TO REMAIN IN PLACE UNTIL PARAPET CONCRETE HAS FULLY CURED.

☞ NOTE: SEE SP108B FOR EXACT DETAILS OF SCHEDULE, WORK TO BE PERFORMED, AND CLOSURE INFORMATION

STATE OF TENNESSEE
DEPARTMENT OF TRANSPORTATION

WEEKEND 1
TYPICAL SECTION

BRIDGE NO. 19-I0065-7.27
FEDERAL I.D. 19I00650029
I-65 OVER WEDGEWOOD AVE

DAVIDSON COUNTY
2020

CARTER D. BEARDEN
REGISTERED ENGINEER
AGRICULTURE
No. 110901
STATE OF TENNESSEE
06/26/20

DESIGNED BY	Lane M. Decker	DATE	06/01/2020
DRAWN BY	Lane M. Decker	DATE	06/01/2020
SUPERVISED BY	Benjamin E. Graves	DATE	06/08/2020
CHECKED BY	Carter D. Bearden	DATE	06/26/2020

HDR

BR-130-688

CONST. NO. 19009-4191-04

PROJECT NO.	YEAR	SHEET NO.
19009-4191-04	2020	

REVISIONS

NO.	DATE	BY	BRIEF DESCRIPTION

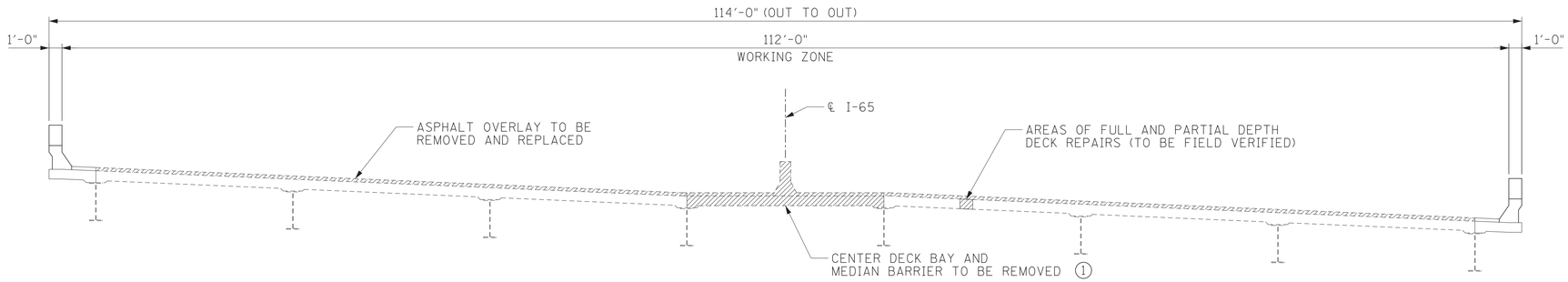

WEEKEND 2 DEMOLITION
TYPICAL SECTION

3/16" = 1'-0"

1 FOR MORE DETAIL OF CENTER DECK BAY AND MEDIAN REPLACEMENT, SEE DWG. NO. BR-130-692.

SCOPE OF WORK

1. PROVIDE TRAFFIC CONTROL UTILIZING DETOURS (WEEKEND CLOSURE) AND LANE CLOSURES. SEE DETAILS ON SHEETS 7-16 & 32.
2. PERFORM FULL AND PARTIAL DEPTH DECK REPAIR AT FIELD DESIGNATED LOCATIONS. FOR NOTES AND DETAILS, SEE DWG. NO. BR-130-695.
3. REMOVE AND REPLACE THE CENTER DECK BAY AND MEDIAN BARRIER ON I-65. FOR NOTES AND DETAILS, SEE DWG. NO. BR-130-692.
4. ** REMOVE AND REPLACE EXISTING ASPHALT WEARING SURFACE. FOR NOTES AND DETAILS, SEE DWG. NO. BR-130-695.
5. PERFORM SPALL REPAIR AT FIELD DESIGNATED LOCATIONS. FOR NOTES AND DETAILS, SEE DWG. NO. BR-130-695.

NOTES:
1. THE FIRST TWO LAYERS OF ASPHALT ARE TO BE PLACED DURING WEEKEND 2 CONSTRUCTION.
2. ** THE FINAL LAYER OF ASPHALT IS TO BE PLACED ON A WEEKDAY NIGHT FOLLOWING THE WEEKEND 2 CONSTRUCTION. IF TIME ALLOWS THIS WORK MAY BE COMPLETED ON WEEKEND 2.

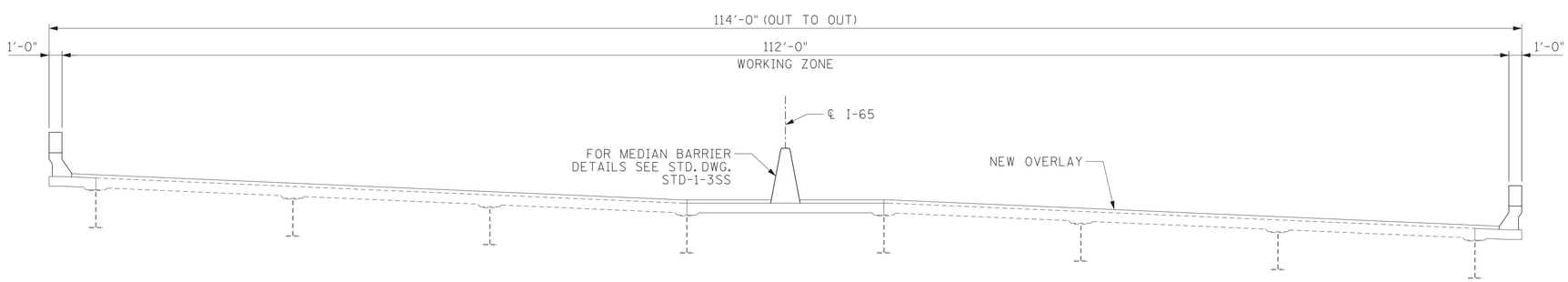

WEEKEND 2 CONSTRUCTION
TYPICAL SECTION

3/16" = 1'-0"

NOTE: SEE SP108B FOR EXACT DETAILS OF SCHEDULE, WORK TO BE PERFORMED AND CLOSURE INFORMATION

STATE OF TENNESSEE
DEPARTMENT OF TRANSPORTATION

WEEKEND 2
TYPICAL SECTION

BRIDGE NO. 19-I0065-7.27
FEDERAL I.D. 19I00650029
I-65 OVER WEDGEWOOD AVE

DAVIDSON COUNTY
2020

CARTER D. BEARDEN
REGISTERED ENGINEER
AGRICULTURE
No. 110941
STATE OF TENNESSEE
06/26/20

DESIGNED BY	Lane M. Decker	DATE	06/01/2020
DRAWN BY	Lane M. Decker	DATE	06/01/2020
SUPERVISED BY	Benjamin E. Groves	DATE	06/08/2020
CHECKED BY	Carter D. Bearden	DATE	06/26/2020

HDR

BR-130-689

CONST. NO. 19009-4191-04

PROJECT NO.	YEAR	SHEET NO.
19009-4191-04	2020	

REVISIONS

NO.	DATE	BY	BRIEF DESCRIPTION

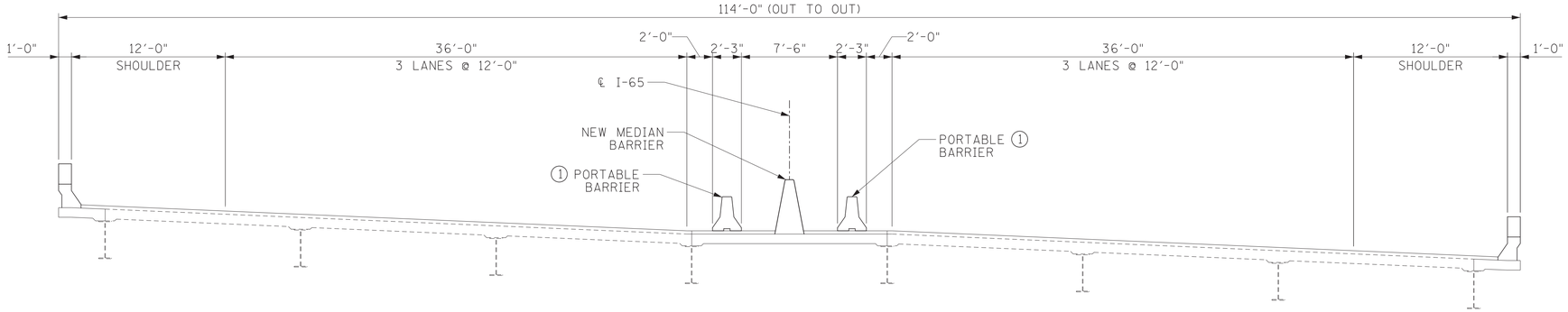

TEMPORARY MEDIAN PROTECTION
AFTER WEEKEND 2
TYPICAL SECTION

3/16" = 1'-0"

① PORTABLE BARRIER SHALL NOT BE PLACED UNTIL DECK HAS FULLY CURED. PORTABLE BARRIER TO REMAIN IN PLACE UNTIL MEDIAN BARRIER CONCRETE HAS CURED.

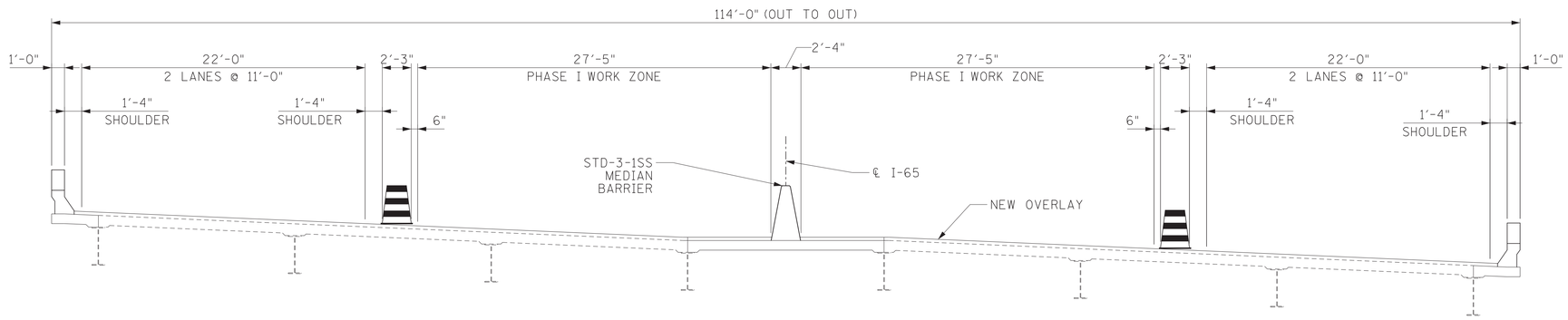

TEMPORARY TRAFFIC CONTROL
WEEKDAY NIGHT AFTER WEEKEND 2
TYPICAL SECTION - PHASE I

3/16" = 1'-0"

SCOPE OF WORK

1. PROVIDE TRAFFIC CONTROL UTILIZING LANE CLOSURES. SEE DETAILS ON SHEETS 17-32.

** 2. PLACE FINAL LAYER OF ASPHALT WEARING SURFACE. FOR NOTES AND DETAILS, SEE DWG. NO. BR-130-695.

NOTE: SEE SP108B FOR EXACT DETAILS OF SCHEDULE, WORK TO BE PERFORMED, AND CLOSURE INFORMATION

NOTES:

** 1. THE FIRST TWO LAYERS OF ASPHALT ARE TO BE PLACED DURING WEEKEND 2 CONSTRUCTION.

** 2. THE FINAL LAYER OF ASPHALT IS TO BE PLACED ON A WEEKDAY NIGHT FOLLOWING THE WEEKEND 2 CONSTRUCTION. IF TIME ALLOWS THIS WORK MAY BE COMPLETED ON WEEKEND 2.

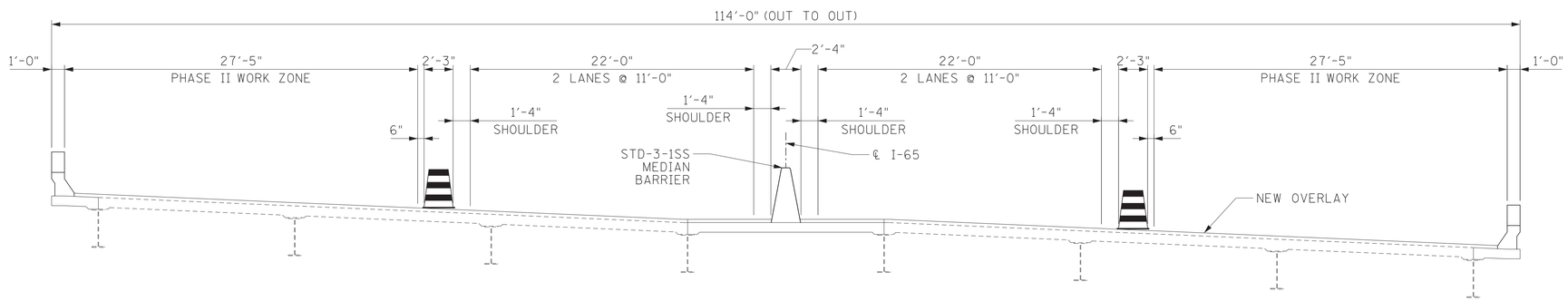

TEMPORARY TRAFFIC CONTROL
WEEKDAY NIGHT AFTER WEEKEND 2
TYPICAL SECTION - PHASE II

3/16" = 1'-0"

STATE OF TENNESSEE
DEPARTMENT OF TRANSPORTATION

FINAL PAVING OPERATIONS
TYPICAL SECTION

BRIDGE NO. 19-I0065-7.27
FEDERAL I.D. 19I00650029
I-65 OVER WEDGEWOOD AVE

DAVIDSON COUNTY
2020

CARTER D. BEARDEN
ENGINEER
STATE OF TENNESSEE
06/26/20

DESIGNED BY	Lane M. Decker	DATE	06/01/2020
DRAWN BY	Lane M. Decker	DATE	06/01/2020
SUPERVISED BY	Benjamin E. Graves	DATE	06/08/2020
CHECKED BY	Carter D. Bearden	DATE	06/26/2020

HDR

BR-130-690

CONST. NO. 19009-4191-04

PROJECT NO.	YEAR	SHEET NO.
19009-4191-04	2020	

REVISIONS

NO.	DATE	BY	BRIEF DESCRIPTION

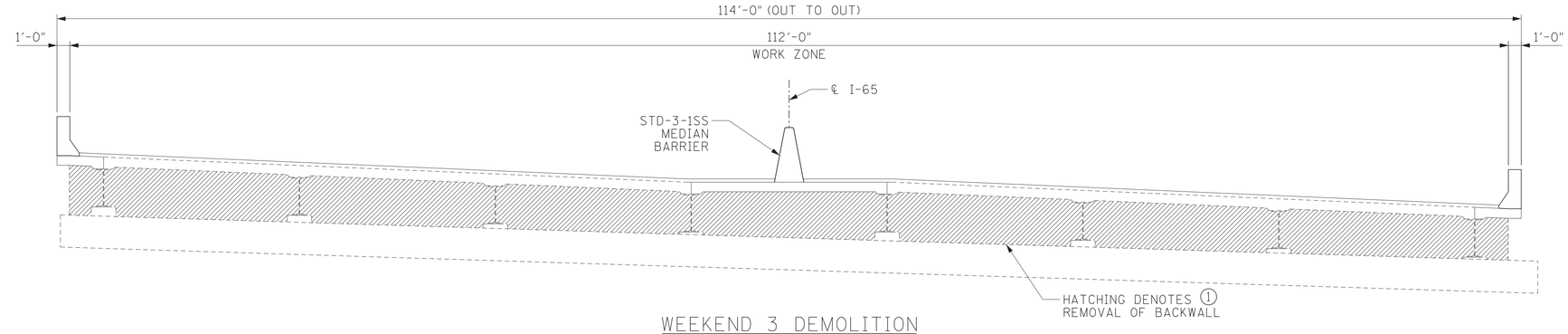

WEEKEND 3 DEMOLITION
TYPICAL SECTION AT ABUTMENT

3/16" = 1'-0"

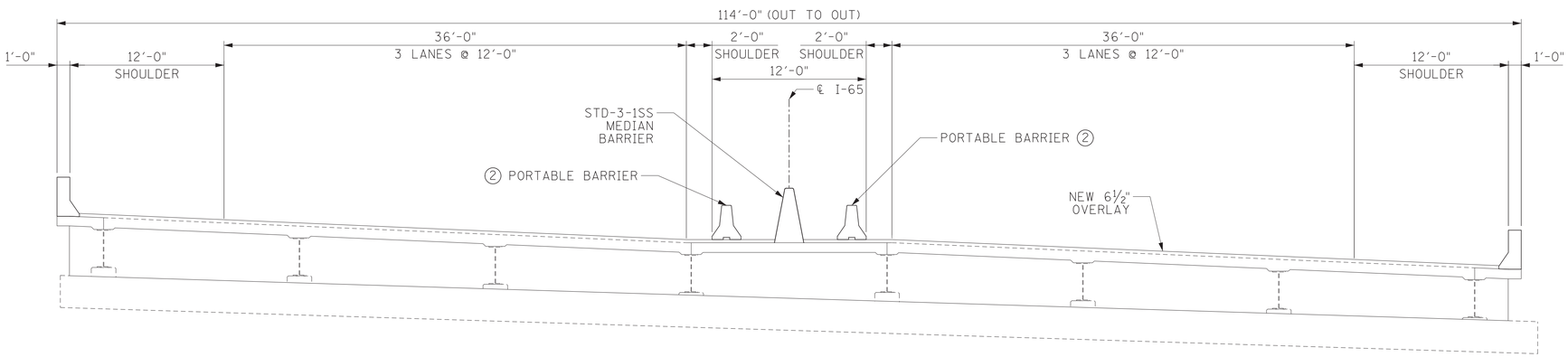

WEEKEND 3 CONSTRUCTION
TYPICAL SECTION AT ABUTMENT

3/16" = 1'-0"

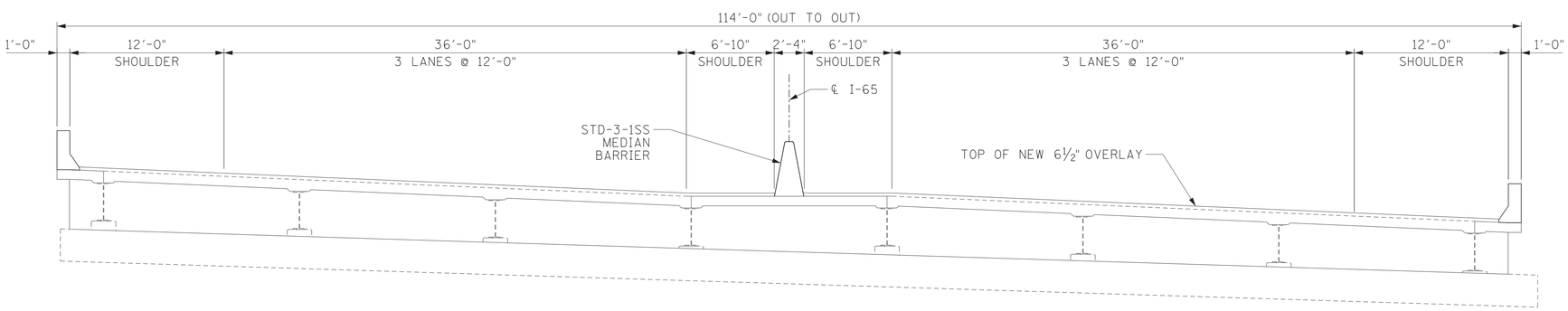

FINAL TYPICAL SECTION
AT ABUTMENT

3/16" = 1'-0"

① FOR MORE DETAIL ON REMOVAL AND REPLACEMENT OF BACKWALL, SEE DWG. NO. BR-130-694.

② PORTABLE BARRIER TO REMAIN IN PLACE UNTIL MEDIAN BARRIER HAS FULLY CURED.

SCOPE OF WORK

1. PROVIDE TRAFFIC CONTROL UTILIZING DETOURS (WEEKEND CLOSURE) AND LANE CLOSURES. SEE DETAILS ON SHEETS 7-16 & 32.
2. PERFORM FULL DEPTH BACKWALL REMOVAL AND REPLACEMENT AT BOTH ABUTMENTS. SAW CUT DECK AND APPROACH. USE EXCAVATION ON APPROACHES AS FORM FOR NEW BACKWALL. FOR NOTES AND DETAILS, SEE DWG. NO. BR-130-694.
4. CLEAN AND PRIME REMAINING PORTION OF BEARINGS, END DIAPHRAGMS AND BEAM ENDS AT BOTH ABUTMENTS. FOR NOTES, SEE DWG. NO. BR-130-685 & BR-130-686.
5. TEXTURE COAT THE PARAPETS AND MEDIAN BARRIER AS SHOWN IN DETAILS ON DWG. NO. BR-130-685.

NOTE: SEE SP108B FOR EXACT DETAILS OF SCHEDULE, WORK TO BE PERFORMED AND CLOSURE INFORMATION

NOTE: SEE SP108B FOR EXACT DETAILS OF SCHEDULE, WORK TO BE PERFORMED, AND CLOSURE INFORMATION

STATE OF TENNESSEE
DEPARTMENT OF TRANSPORTATION

WEEKEND 3
TYPICAL SECTION

BRIDGE NO. 19-I0065-7.27
FEDERAL I.D. 19I00650029
I-65 OVER WEDGEWOOD AVE

DAVIDSON COUNTY
2020

CARTER D. BEARDEN
REGISTERED ENGINEER
AGRICULTURE
No. 115561
STATE OF TENNESSEE
06/26/20

DESIGNED BY	Lane M. Decker	DATE	06/01/2020
DRAWN BY	Lane M. Decker	DATE	06/01/2020
SUPERVISED BY	Benjamin E. Graves	DATE	06/08/2020
CHECKED BY	Carter D. Bearden	DATE	06/26/2020

HDR

BR-130-691

*LIMITS OF WORK TO BE PERFORMED ON WEEKEND 3.
SEE DWG. NOS. BR-130-690 & BR-130-694 FOR NOTES AND DETAILS.

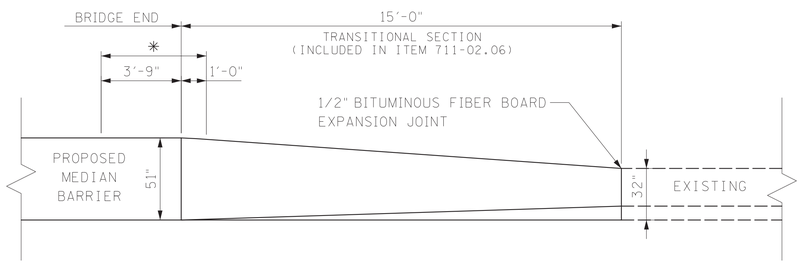

MEDIAN BARRIER TRANSITION

NOT TO SCALE

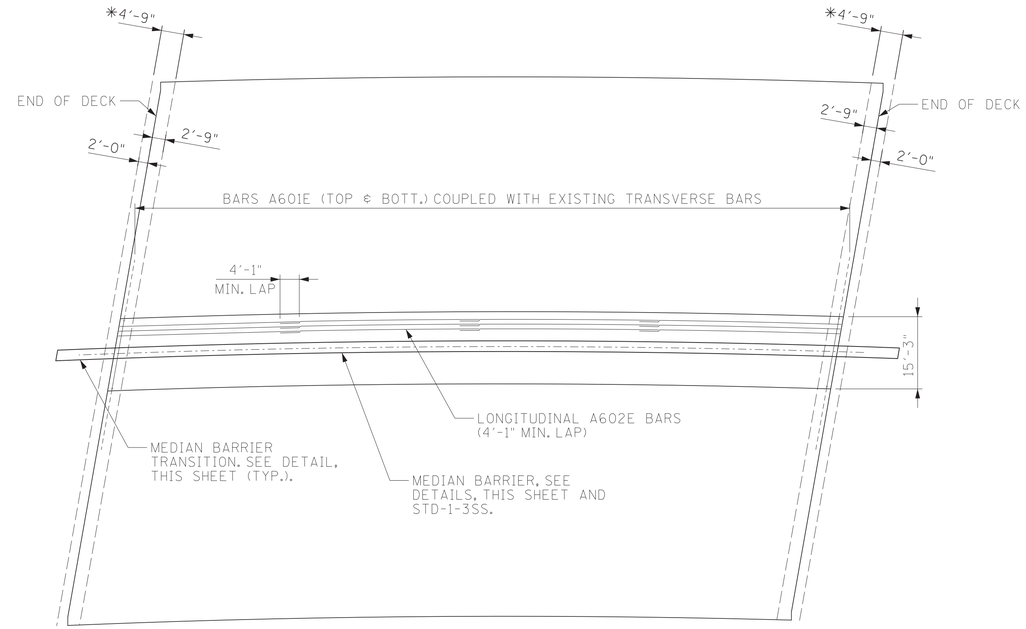

PLAN VIEW OF MEDIAN REPLACEMENT

NOT TO SCALE

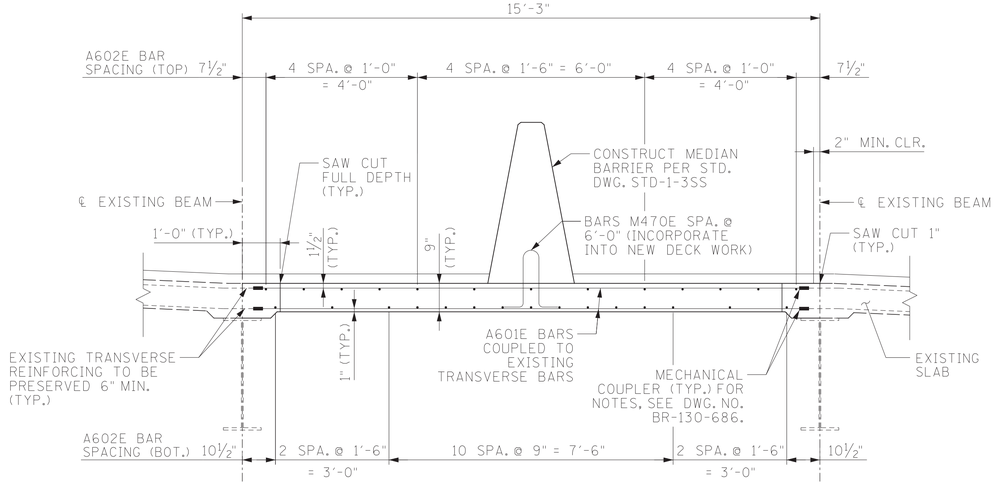

SECTION THROUGH MEDIAN REPLACEMENT

NOT TO SCALE

BILL OF STEEL

MEDIAN REINFORCEMENT

BARS	SIZE	NO. REQ'D.	BENDING DIMENSIONS				LENGTH
			A	B	C	D	
A601E	6	708					14'-11"
A602E	6	112					40'-11"
M470E	4	25	1'-6"	5"	6"		4'-3"

NOTES:

ALL BAR DIMENSIONS ARE OUT-TO-OUT.

ALL DIMENSIONS SHALL BE FIELD VERIFIED BY CONTRACTOR PRIOR TO FABRICATION.

BARS ENDING IN "E" TO BE EPOXY COATED.

FOR M470E BEND DIAGRAM, SEE STD. DWG. STD-1-3SS.

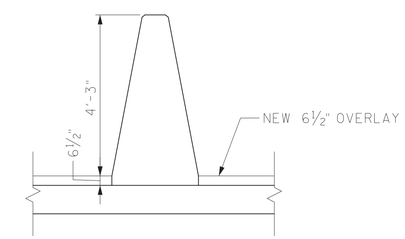

MODIFIED STD-1-3SS MEDIAN BARRIER

CONSTRUCT MEDIAN BARRIER PER STD.
DWG. STD-1-3SS EXCEPT AS NOTED

CONST. NO. 19009-4191-04

PROJECT NO.	YEAR	SHEET NO.
19009-4191-04	2020	

REVISIONS

NO.	DATE	BY	BRIEF DESCRIPTION

NOTES:

CONTRACTOR SHALL VERIFY ALL DIMENSIONS PRIOR TO BEGINNING CONSTRUCTION.

SUFFICIENT LENGTH OF EXISTING TRANSVERSE STEEL SHALL BE PRESERVED AND CLEANED TO ALLOW COUPLING TO NEW STEEL.

MEDIAN BARRIER SHALL BE REPLACED AFTER DECK HAS BEEN POURED.

PLACE BARS M470E WHEN PLACING DECK.

MEDIAN BARRIER CONCRETE MUST MEET ALL SPECIFICATIONS IN GENERAL NOTES AND CONCRETE MUST BE IN PLACE A MINIMUM OF THREE (3) DAYS BEFORE BARRIER IS EXPOSED TO TRAFFIC.

STATE OF TENNESSEE
DEPARTMENT OF TRANSPORTATION

MEDIAN REPAIR DETAILS

BRIDGE NO. 19-I0065-7.27
FEDERAL I.D. 19I00650029
I-65 OVER WEDGEWOOD AVE

DAVIDSON COUNTY
2020

CARTER D. BEARDEN
REGISTERED ENGINEER
AGRICULTURE
CIVIL
No. 110921
STATE OF TENNESSEE
06/26/20

DESIGNED BY	Lane M. Decker	DATE	06/01/2020
DRAWN BY	Lane M. Decker	DATE	06/01/2020
SUPERVISED BY	Benjamin E. Graves	DATE	06/08/2020
CHECKED BY	Carter D. Bearden	DATE	06/26/2020

HDR

BR-130-692

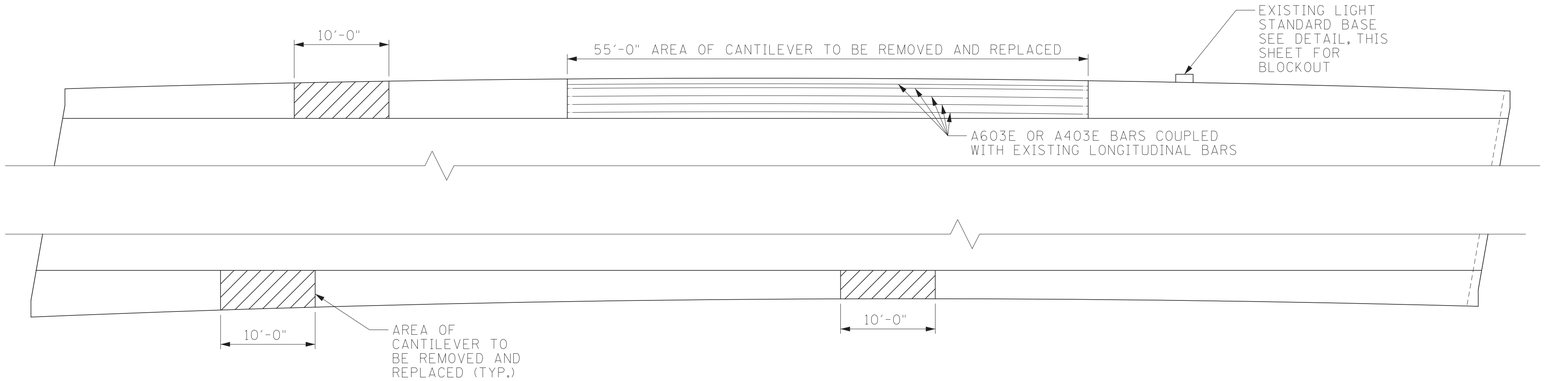

PLAN VIEW

NOT TO SCALE

NOTES:

CONTRACTOR SHALL VERIFY ALL DIMENSIONS PRIOR TO BEGINNING CONSTRUCTION.

REMOVE STRUCTURAL TUBING AND INSTALL PARAPET EXTENSION.

SUFFICIENT LENGTH OF EXISTING PARAPET STEEL SHALL BE PRESERVED AND CLEANED TO ALLOW COUPLING TO NEW STEEL.

ALL COSTS TO REMOVE AND REPLACE THE ASPHALT ADJACENT TO THE AREA OF PARAPET REPLACEMENT TO BE INCLUDED IN ITEM 604-10.42.

PARAPET SHALL NOT BE POURED UNTIL AFTER CANTILEVER HAS CURED.

PLACE BARS GA501E & C501E WHEN PLACING DECK.

FOR LIGHT STANDARD BASE DETAILS & ELECTRICAL JUNCTION BOX DETAILS, SEE DRAWING NO. K-82-152 FROM THE EXISTING BRIDGE PLANS

PARAPET CONCRETE MUST MEET ALL SPECIFICATIONS IN GENERAL NOTES AND CONCRETE MUST BE IN PLACE A MINIMUM OF THREE (3) DAYS BEFORE PARAPET IS EXPOSED TO TRAFFIC.

CONST. NO. 19009-4191-04

PROJECT NO.	YEAR	SHEET NO.
19009-4191-04	2020	

REVISIONS

NO.	DATE	BY	BRIEF DESCRIPTION

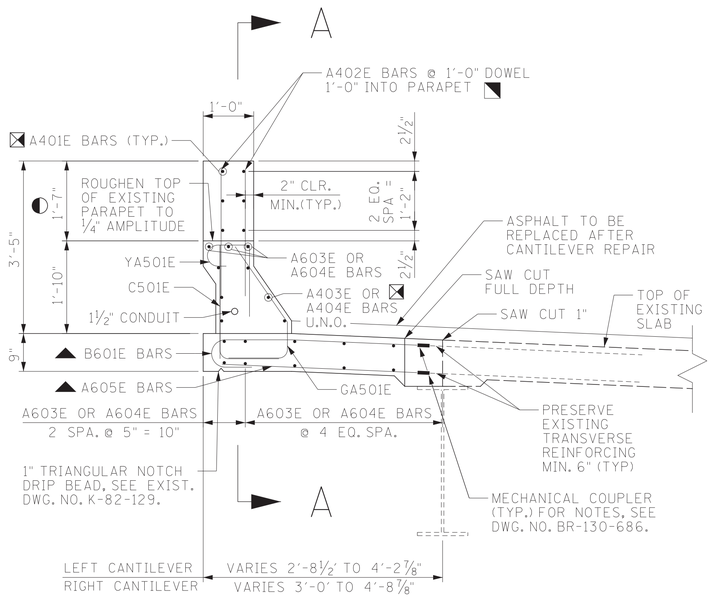

SECTION THROUGH PARAPET REPLACEMENT

NOT TO SCALE

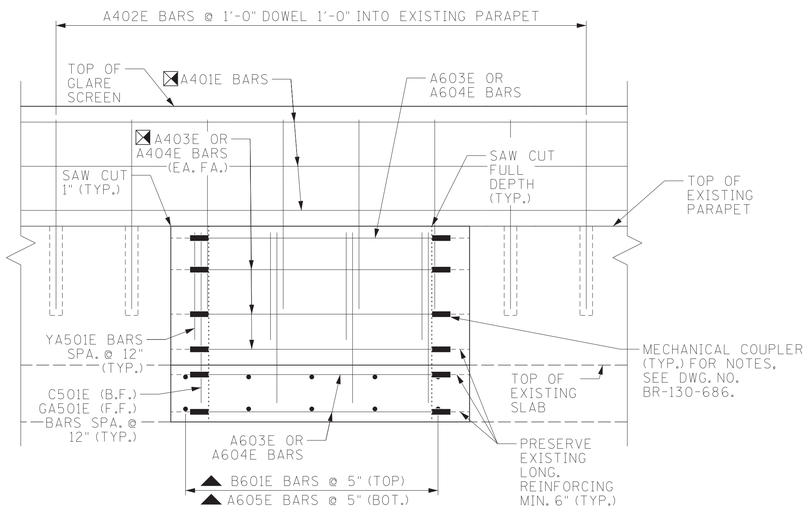

VIEW A-A

NOT TO SCALE

BILL OF STEEL

CANTILEVER REINFORCEMENT

BARS	SIZE	NO. REQ'D.	BENDING DIMENSIONS A	B	C	D	LENGTH
A401E	4	60					33'-3"
A402E	4	608					2'-5"
A403E	4	12					30'-1"
A404E	4	18					9'-8"
A603E	6	13					54'-8"
A604E	6	39					9'-8"
A605E	6	204					4'-2"
B601E	6	204	4'-4"				5'-0"
C501E	5	85	2'-4"	1'-2"			3'-6"
GA501E	5	85	1'-2"	0'-8.5"	1'-5.5"	1'-0"	3'-8"
YA501E	5	85	0'-10"	1'-2"			2'-8"

NOTES:

ALL BAR DIMENSIONS ARE OUT-TO-OUT.

ALL DIMENSIONS SHALL BE FIELD VERIFIED BY CONTRACTOR PRIOR TO FABRICATION.

BARS ENDING IN "E" TO BE EPOXY COATED.

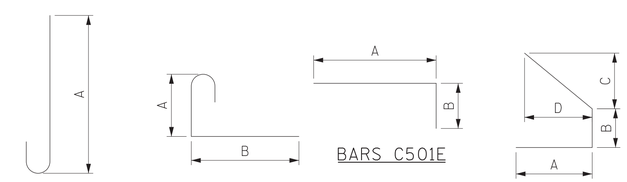

BARS B601E BARS YA501E BARS C501E BARS GA501E

◐ PARAPET EXTENSION MAY BE POURED MONOLITHICALLY WITH REPLACEMENT PARAPET AT END BRIDGE ON LEFT SIDE.

◥ GROUTED BARS IN DRILLED HOLES: VERTICALLY DRILLED HOLES SHALL BE DRILLED ¼" IN DIAMETER LARGER THAN THE BAR, CLEANED, PACKED WITH EPOXY GROUT AND THE BAR SHALL BE DRIVEN TO ITS SEAT. ALL GROUTING MATERIAL SHALL BE APPROVED BY T.D.O.T. MATERIALS AND TESTS.

▲ BARS TO BE FIELD CUT AND COUPLED TO EXISTING TRANSVERSE REINFORCING.

⊠ A40_E BARS MIN. 2'-9" LAP LENGTH.

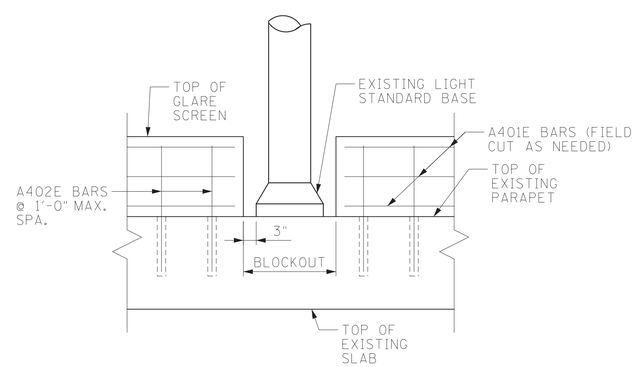

GLARE SCREEN BLOCKOUT

NOT TO SCALE

STATE OF TENNESSEE
DEPARTMENT OF TRANSPORTATION

CANTILEVER REPAIR DETAILS

BRIDGE NO. 19-I0065-7.27
FEDERAL I.D. 19I00650029
I-65 OVER WEDGEWOOD AVE

DAVIDSON COUNTY
2020

CARTER D. BEARDEN
STATE OF TENNESSEE
06/26/20

DESIGNED BY	Lane M. Decker	DATE	06/01/2020
DRAWN BY	Lane M. Decker	DATE	06/01/2020
SUPERVISED BY	Benjamin E. Graves	DATE	06/08/2020
CHECKED BY	Carter D. Bearden	DATE	06/26/2020

HDR

BR-130-693

CONST. NO. 19009-4191-04

PROJECT NO.	YEAR	SHEET NO.
19009-4191-04	2020	

REVISIONS

NO.	DATE	BY	BRIEF DESCRIPTION

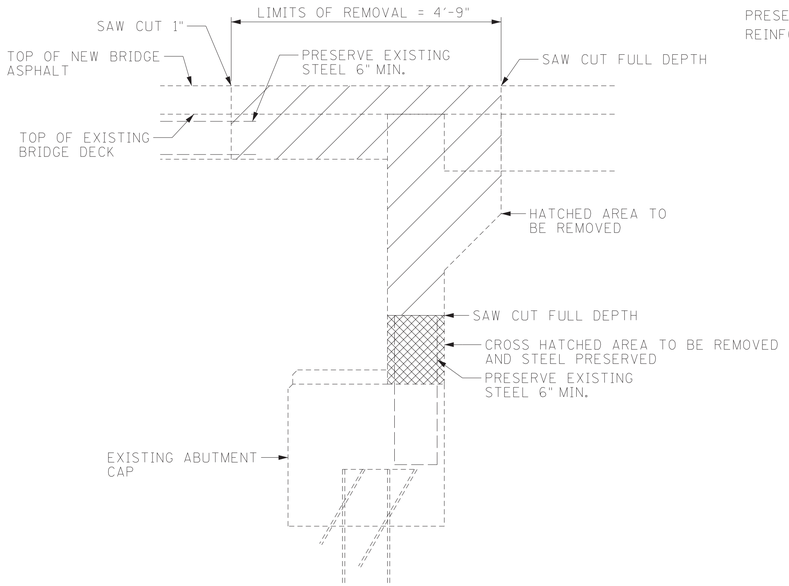

SECTION THROUGH BACKWALL
(DEMOLITION)
¾" = 1'-0

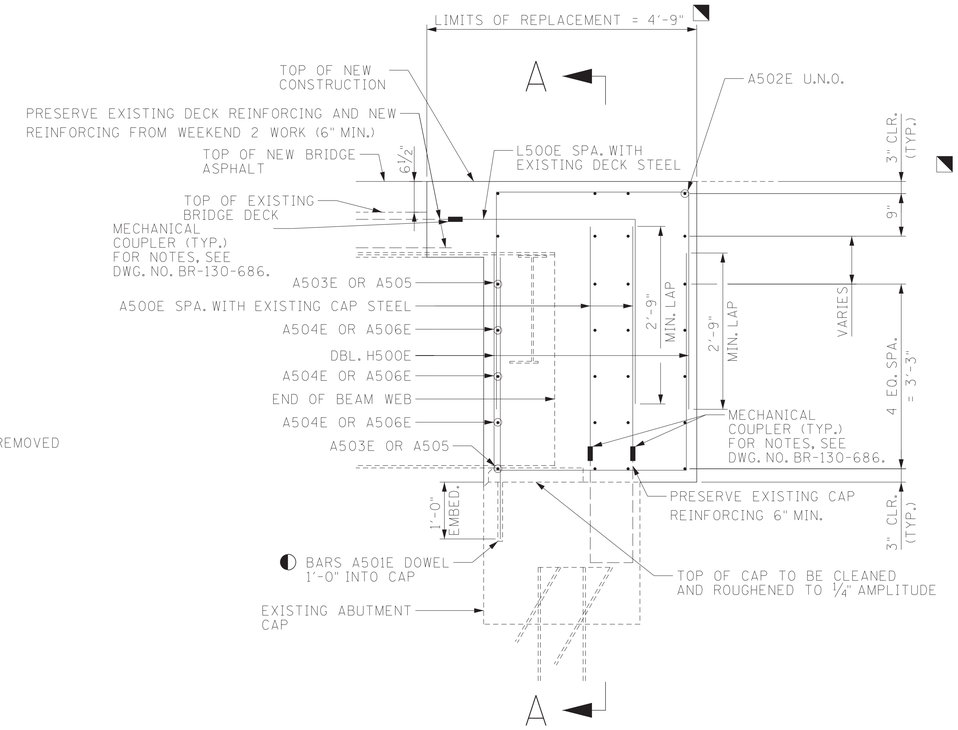

SECTION THROUGH BACKWALL
(REPLACMENT)
¾" = 1'-0

NOTES:

CONTRACTOR SHALL VERIFY ALL DIMENSIONS PRIOR TO BEGINNING CONSTRUCTION.

EXISTING LONGITUDINAL STEEL IN DECK SHALL BE CLEANED, STRAIGHTENED AND INCORPORATED INTO NEW WORK.

◥ FINAL MEDIAN BARRIER, PARAPET, PARAPET EXTENSION, AND END POSTS WITHIN LIMITS OF REPLACEMENT TO BE PLACED AFTER BACKWALL CONCRETE HAS BEEN CURED.

SUFFICIENT LENGTH OF EXISTING CAP AND DECK STEEL SHALL BE PRESERVED AND CLEANED TO ALLOW COUPLING TO NEW STEEL.

BILL OF STEEL

BACKWALL REINFORCEMENT

BARS	SIZE	NO. REQ'D.	BENDING DIMENSIONS A	B	C	D	LENGTH
A500E	5	454					4'-3"
A501E	5	204					4'-11"
A502E	5	138					40'-9"
A503E	5	8					1'-3"
A504E	5	12					2'-2"
A505E	5	28					13'-0"
A506E	5	42					14'-8"
L500E	5	214	3'-5"	3'-3"			6'-8"
H500E	5	408	3'-3"	3'-10"			10'-11"

NOTES:
ALL BAR DIMENSIONS ARE OUT-TO-OUT.

ALL DIMENSIONS SHALL BE FIELD VERIFIED BY CONTRACTOR PRIOR TO FABRICATION.

BARS ENDING IN "E" TO BE EPOXY COATED.

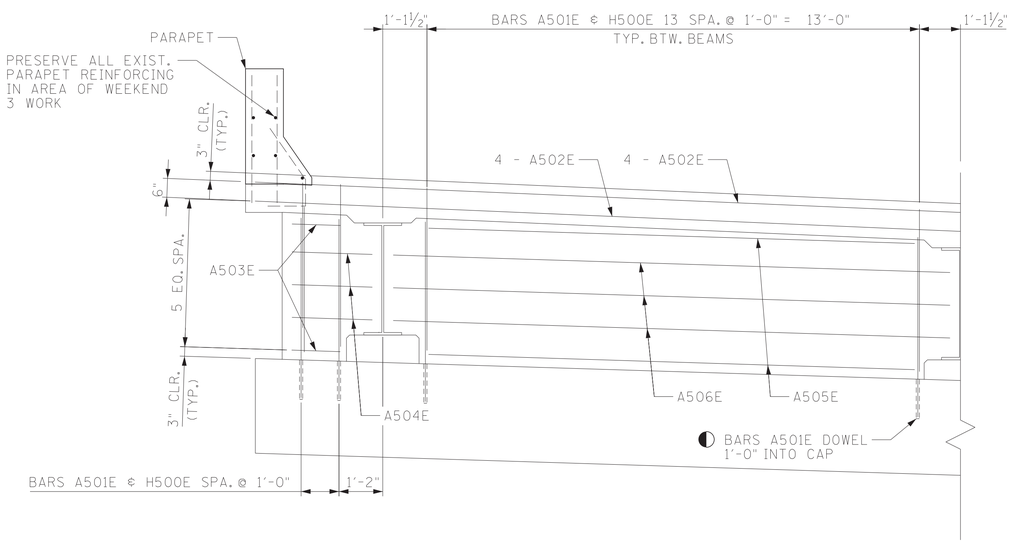

ELEVATION VIEW
½" = 1'-0

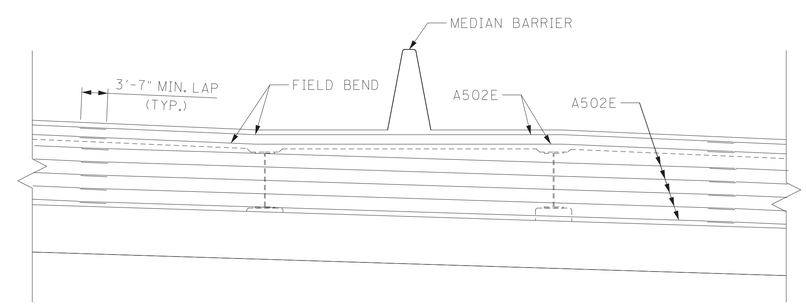

VIEW A-A
¼" = 1'-0

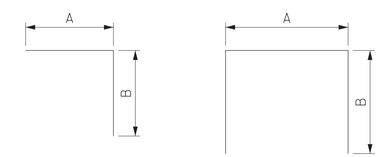

BAR L500E BAR H500E

◐ GROUTED BARS IN DRILLED HOLES: VERTICALLY DRILLED HOLES SHALL BE DRILLED ¼" IN DIAMETER LARGER THAN THE BAR, CLEANED, PACKED WITH EPOXY GROUT AND THE BAR SHALL BE DRIVEN TO ITS SEAT. ALL GROUTING MATERIAL SHALL BE APPROVED BY T.D.O.T. MATERIALS AND TESTS.

DESIGNED BY Lane M. Decker DATE 06/01/2020
DRAWN BY Lane M. Decker DATE 06/01/2020
SUPERVISED BY Benjamin E. Graves DATE 06/08/2020
CHECKED BY Carter D. Bearden DATE 06/26/2020

CARTER D. BEARDEN
STATE OF TENNESSEE
06/26/20

STATE OF TENNESSEE
DEPARTMENT OF TRANSPORTATION

BACKWALL REPAIR DETAILS

BRIDGE NO. 19-I0065-7.27
FEDERAL I.D. 19I00650029
I-65 OVER WEDGEWOOD AVE

DAVIDSON COUNTY
2020

BR-130-694

CONST. NO. 19009-4191-04

PROJECT NO.	YEAR	SHEET NO.
19009-4191-04	2020	

REVISIONS

NO.	DATE	BY	BRIEF DESCRIPTION

CONCRETE FOR DECK REPAIR SHALL BE HIGH EARLY STRENGTH CONCRETE. f_c = 3,500 PSI @ 28 DAY STRENGTH. TRAFFIC WILL NOT BE PERMITTED ON ANY OF THE REPAIRED AREAS UNTIL TEST SPECIMENS ATTAIN A COMPRESSIVE STRENGTH OF 3,000 PSI MINIMUM.

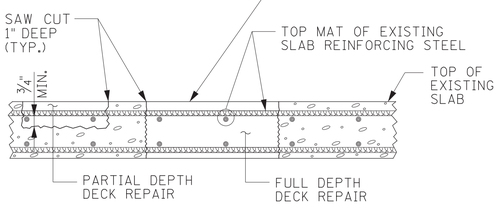

FULL AND PARTIAL DEPTH DECK REPAIR

REMOVE CONCRETE IN ALL DELAMINATED AREAS TO A DEPTH OF 3/4" BELOW THE TOP BAR OF THE TOP MAT OF REINFORCING STEEL. ALL REINFORCING STEEL IN AREAS OF DECK REPAIR SHALL BE COMPLETELY CLEANED. AREAS OF CONCRETE REMOVAL SHALL BE DESIGNATED BY PERSONNEL FROM THE BRIDGE REPAIR OFFICE. INSPECTIONS TO DETERMINE AREAS OF DECK REPAIR SHALL BE SCHEDULED WITH THE BRIDGE REPAIR OFFICE AT LEAST THREE (3) DAYS IN ADVANCE. DECK REPAIR WILL BE PAID FOR UNDER ITEM NO. 604-10.50, BRIDGE DECK REPAIR (PARTIAL DEPTH OF SLAB), AND ITEM NO. 604-10.30, BRIDGE DECK REPAIR (FULL DEPTH OF SLAB). DURING PARTIAL DEPTH REPAIRS, SHOULD DETERIORATED CONCRETE BE ENCOUNTERED WHICH APPEARS TO RUN FULL DEPTH IN THE SLAB, THE ENGINEER MAY DESIGNATE THESE AREAS TO BE REPAIRED UNDER ITEM NO. 604-10.30. POWER DRIVEN HAND TOOLS USED FOR THE REMOVAL OF UNSOUND CONCRETE IN MAKING PARTIAL AND FULL DEPTH REPAIRS ARE SUBJECT TO THE FOLLOWING RESTRICTIONS: 1) (PARTIAL DEPTH REPAIRS) PNEUMATIC HAMMERS HEAVIER THAN NOMINAL 60 POUND CLASS SHALL NOT BE USED. 2) (FULL DEPTH REPAIRS) PNEUMATIC HAMMERS HEAVIER THAN NOMINAL 90 POUND CLASS SHALL NOT BE USED. ALSO ALL DECK REPAIR OVER BEAMS WILL BE RESTRICTED TO 60 POUND PNEUMATIC HAMMERS. 3) CHIPPING HAMMERS OF THE 15 POUND CLASS SHALL BE USED TO REMOVE CONCRETE FROM BENEATH ANY REINFORCING STEEL.

ITEM NO. 604-10.30 AND 604-10.50 MAY BE INCREASED OR DECREASED AS DIRECTED BY THE ENGINEER.

DENOTES AREA OF EXISTING SPALLED CONCRETE

★ SAW CUT EXISTING CONCRETE 1" DEEP SO AS TO OBTAIN A RECTANGULAR AREA. ALL EXISTING REINFORCEMENT SHALL BE CAREFULLY PRESERVED AND BLAST CLEANED.

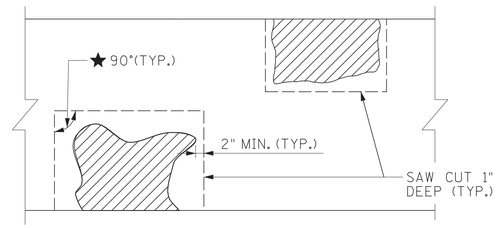

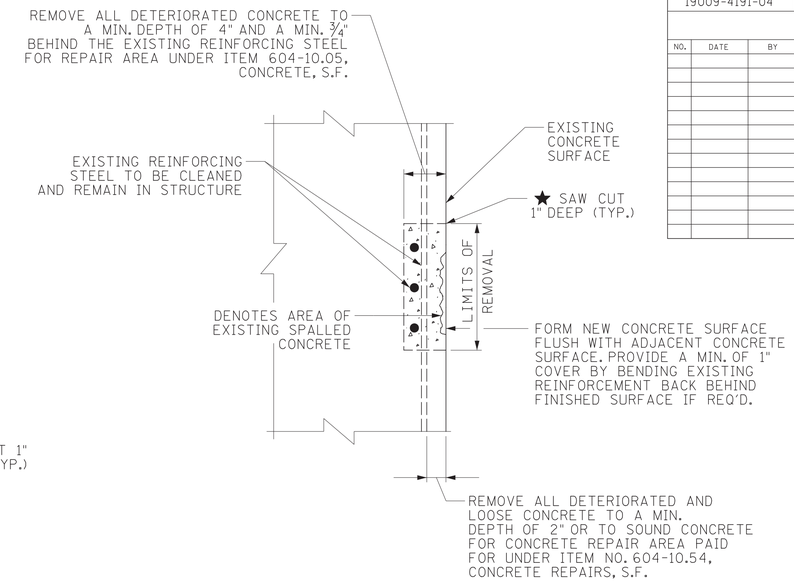

SPALL SURFACE REPAIR DETAILS

NOTES FOR ITEM NO. 604-10.54:

THE COST OF SAW CUTTING, REMOVING SPALLED OR CRACKED CONCRETE, CLEANING EXPOSED REINFORCING STEEL, PATCHING MATERIAL, LABOR AND ANY MISCELLANEOUS MATERIALS NECESSARY TO COMPLETE THE REPAIRS AS SHOWN SHALL BE INCLUDED IN ITEM NO. 604-10.54, CONCRETE REPAIRS, S.F.

PATCHING MATERIAL SHALL BE A POLYMER-MODIFIED CEMENTITIOUS STRUCTURAL PATCHING VERTICAL AND OVERHEAD MATERIAL. SEE T.D.O.T. QUALIFIED PRODUCTS LIST 13, SPEC. SECTION B.6. SUBLIST F FOR ACCEPTABLE PATCHING MATERIALS.

AFTER CONCRETE REMOVAL OF THE 2" DEPTH HAS TAKEN PLACE, THE ENGINEER SHALL HAVE THE OPTION TO REMOVE ADDITIONAL CONCRETE DEPTH AND SHALL DESIGNATE THIS AREA TO BE REPAIRED AND PAID FOR UNDER ITEM NO. 604-10.05 INSTEAD OF UNDER ITEM NO. 604-10.54.

ITEM NO. 604-10.54 SHALL BE BID SUCH THAT THIS ITEM MAY BE INCREASED OR DECREASED AS DIRECTED BY THE ENGINEER.

NOTES FOR ITEM NO. 604-10.05:

COST OF CUTTING, REMOVING SPALLED OR CRACKED CONCRETE, CLEANING EXPOSED REINFORCING STEEL, CONCRETE, LABOR AND ANY MISCELLANEOUS MATERIALS NECESSARY TO COMPLETE THE REPAIRS AS SHOWN SHALL BE INCLUDED IN ITEM NO. 604-10.05, CONCRETE S.F.

CONCRETE SHALL BE HIGH EARLY STRENGTH CONCRETE, F'C = 3500 PSI AT 28 DAY STRENGTH.

ITEM NO. 604-10.05 SHALL BE BID SUCH THAT THIS ITEM MAY BE INCREASED OR DECREASED AS DIRECTED BY ENGINEER.

☞ ALL AREAS TO BE REPAIRED ARE TO BE MARKED BY THE ENGINEER FROM THE BRIDGE INSPECTION AND REPAIR OFFICE.

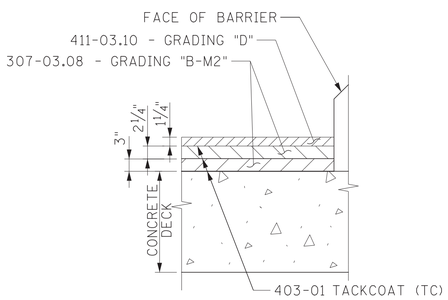

SECTION SHOWN IS AT PARAPET AND MEDIAN BARRIER.

ASPHALT OVERLAY

NOTES:
1. THE FIRST TWO LAYERS OF ASPHALT ARE TO BE PLACED DURING WEEKEND 2 CONSTRUCTION.

** 2. THE FINAL LAYER OF ASPHALT IS TO BE PLACED ON A WEEKDAY NIGHT FOLLOWING THE WEEKEND 2 CONSTRUCTION.

** IF TIME ALLOWS THIS WORK MAY BE COMPLETED ON WEEKEND 2.

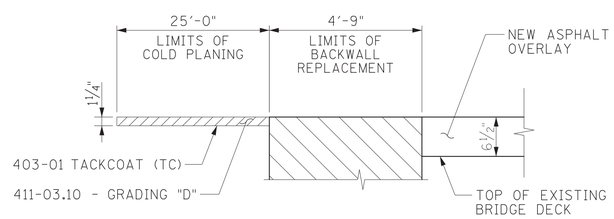

ASPHALT APPROACH PAVEMENT TRANSITION

THE BRIDGE APPROACH TRANSITIONS SHALL BE FIELD ADJUSTED TO MATCH THE PROPOSED TOP OF NEW CONCRETE BACKWALL. ITEM NO. 411-03.10, GRADING "D", SHALL EXTEND 25 FT. FROM BRIDGE ENDS TO PROVIDE A SMOOTH TRANSITION.

NOTE: CONTRACTOR SHALL VERIFY ALL DIMENSIONS PRIOR TO BEGINNING CONSTRUCTION.

STATE OF TENNESSEE
DEPARTMENT OF TRANSPORTATION

GENERAL REPAIR DETAILS

BRIDGE NO. 19-I0065-7.27
FEDERAL I.D. 19I00650029
I-65 OVER WEDGEWOOD AVE

DAVIDSON COUNTY
2020

CARTER D. BEARDEN
REGISTERED ENGINEER
AGRICULTURE
No. 110921
STATE OF TENNESSEE
06/26/20

DESIGNED BY	Lane M. Decker	DATE	06/01/2020
DRAWN BY	Lane M. Decker	DATE	06/01/2020
SUPERVISED BY	Benjamin E. Graves	DATE	06/08/2020
CHECKED BY	Carter D. Bearden	DATE	06/26/2020

HDR

BR-130-695

FED. ROAD DIST. NO.	STATE	FED. AID PROJ. NO.	FISCAL YEAR	SHEET NO.	TOTAL SHEETS
3	TENN	I-65-2(33)81	1970	157	345

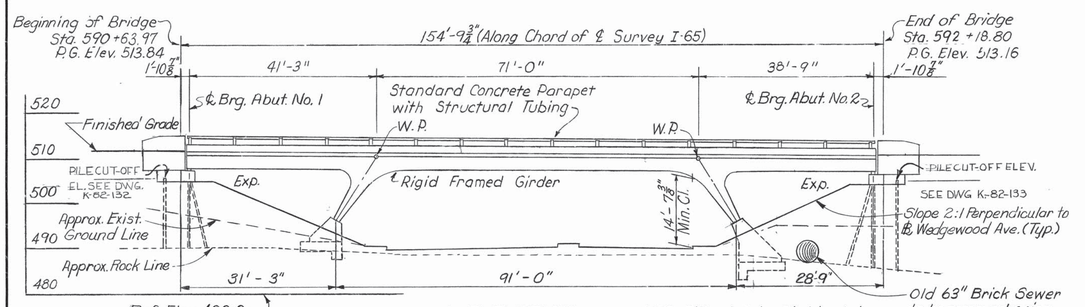

ELEVATION

NOTE: Fills at ends of bridge to be in place and thoroughly compacted before Abutment Piles are driven.

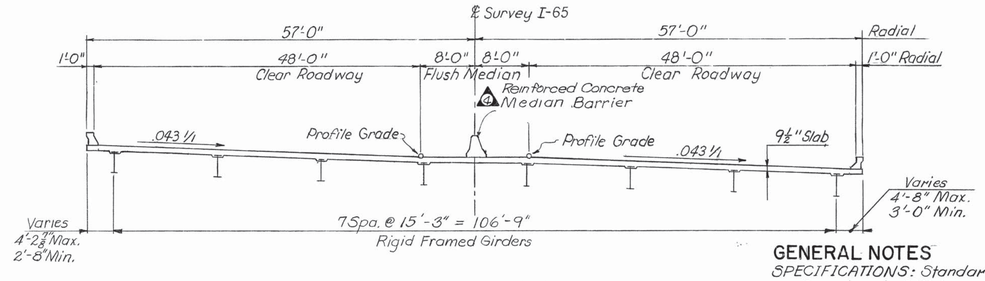

SECTION A-A

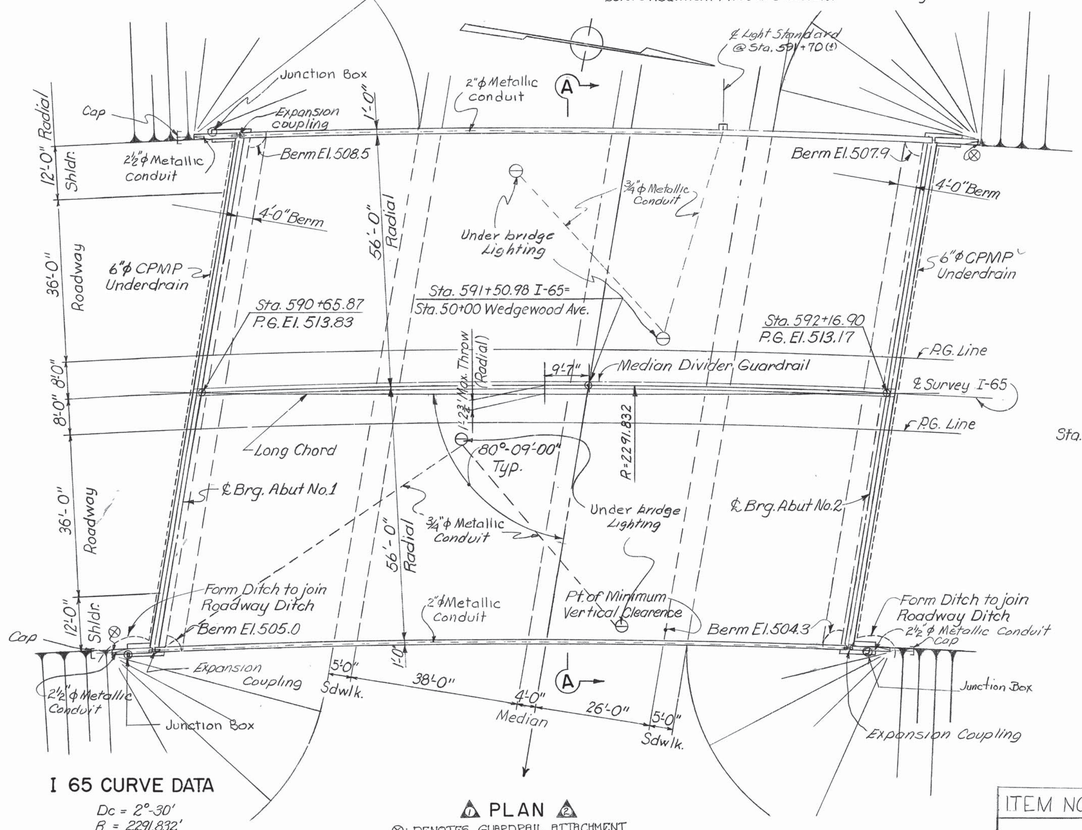

I 65 CURVE DATA

Dc = 2°-30'
R = 2291.832'
S.E = 0.043 1/1

PLAN

⊗: DENOTES GUARDRAIL ATTACHMENT

Note:
Dimensions indicated in parentheses apply to soundings 15 thru 26, taken May 1969. Soundings 1 thru 14 were taken Oct, 1965

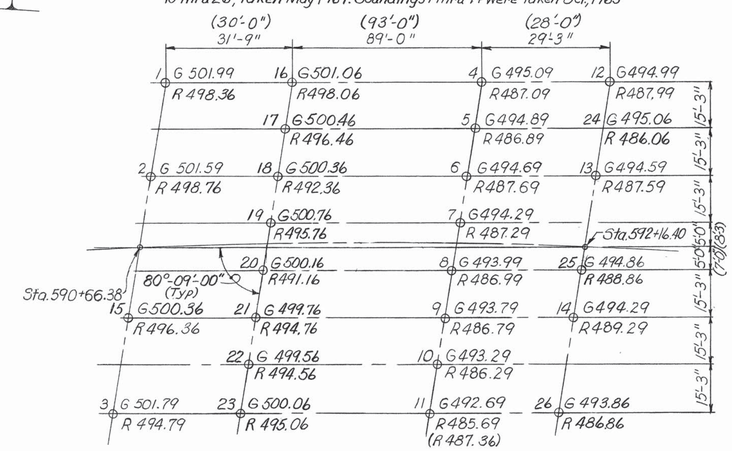

SOUNDING SKETCH

ESTIMATED QUANTITIES

ITEM NO.		204-02.01	204-04.01	604-03.01	604-03.02	604-04.02	616-06	604-03.03	604-05	606-02.03	705-08.03	714-01			
Item		Excav. Cu. Yds. Dry	Excav. Cu. Yds. Rock	Concrete Class "A" Cu. Yds.	Reinforcing Steel-Lbs.	Steel Structures	Bridgerail Lin. Ft.	Linseed Oil Treatment Sq. Yds.	Rock Drilling Lin. Ft.	Steel Piles Lin. Ft.	Reinf. Conc. Median Barrier Lin. Ft.	Lighting	710-10	710-11	Slab Support Detail
Superstructure		—	—	517.3	185,565		305	203.5	—	—	152				
Abutment No. 1		—	—	54.5	9,201			11.9	—	21.6					
Frame	Line A	29.3	3.3	105.6	6728				4.8	—					
Footings	Line B	33.3	4.0	173.2	10,572				4.8	—					
Abutment No. 2		—	—	63.7	9,170			11.7	—	24.3					
Total		62.6	7.3	924.3	[illegible]	*Lump Sum	305	227.1	9.6	45.9	15.2	**Lump Sum	25.6	2.8	

	710-10	710-11
	** 6" PERFORATED C.M.P. 18-GA. POROUS BLACKFILL MATERIAL LIN. FT.	6" C.M.P. 18-GA. LIN. FT.

* Total estimated weight of steel structures = 363,700 Lbs. (All A-36). Estimated weight includes bearing devices, shear connectors, stiffeners, diaphragms, weld metal, ETC. ALSO SEE TENN. STANDARD SPECIFICATION SEC. 602.27 & 602.28

NOTE: THE COST OF BITUMINOUS FIBER BOARD, JOINT SEALER TO BE INCLUDED IN PRICE OF BRIDGE ITEMS BIDON.

3 Cost of 16-7/8" ϕ threaded steel inserts and 16-7/8" x 4" hex head bolts (A307) to be included in bridge items bid on. Excavation is based on lower road profile or existing ground, whichever is lower.

2 ** Lighting System (Lump Sum): This item includes furnishing and placing 20 lin. ft. of 2 1/2" ϕ metallic conduit, 285 lin. ft. of 2" ϕ metallic conduit and 140 lin. ft. of 3/4" ϕ metallic conduit plus all pull boxes junction boxes and auxiliary equipment req'd. for the Bridge Lighting. For additional details see Dwg. K-82-152 and Highway lighting drawings.

** Cost of polyethylene sheeting and all miscellaneous items necessary for installation to be included in cost of perforated C.M. pipe.

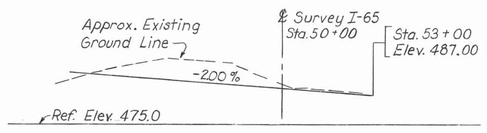

WEDGEWOOD AVE. PROFILE

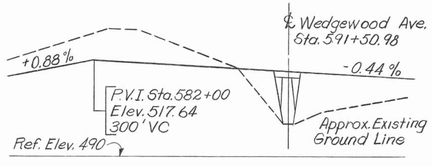

INTERSTATE 65 PROFILE

4 NOTE: Item no 705-08.03, Reinf. concrete Median Barrier includes 0.101 cu. yds. Concrete and 7.674 lbs. Reinforcing steel per lin. ft.

1 R.M.D 5-25-70 List of Drawings, Estimated Quantities & Wingpost.
2 R.M.D 6-12-70 Lighting Details & Notes
3 R.M.D. 8-31-70 Gen. Notes, Foundation Note & List of Dwgs.
4 R.M.D. 7-12-71 Estimated Quantities & Section A-A.

GENERAL NOTES

SPECIFICATIONS: Standard Road and Bridge Specifications of the Tenn. Department of Highways, 1968 Edition.
DESIGN SPECIFICATIONS: 1969 Edition of A.A.S.H.O. Standard Specifications for Highway Bridges, with addenda.
LOADING: HS-20-44 and Alternate Military. 3
CONCRETE: To be Class "A" f'c 3000 psi. See Special Provisions Regarding Concrete Finishes.
REINFORCING STEEL: To be ASTM A615. Standard hook details as recommended by C.R.S.I shall apply unless otherwise noted.
STEEL STRUCTURES: See notes on Dwg. No. K-82-130. TENN. STD. SPEC. 602.
WELDING: See TENN. STD. SPECIFICATIONS 602.13 & NOTES ON DWG. K-82-130.
HIGH STRENGTH BOLTS: SEE TENNESSEE STANDARD SPECIFICATIONS SECTION 602.12 & NOTES ON DWG. K-82-130

RADIOGRAPHIC AND MAGNETIC PARTICLE INSPECTION: See Special Provisions regarding Welded Structures and notes on Dwg. No. K-82-130.
PAINT: SEE TENNESSEE HIGHWAYS STANDARD SPECIFICATIONS SECTION 603 SYSTEM B-SILICO CHROMATE
PILES: Steel Piles 10BP42#. Piles are to be driven to refusal on rock or a minimum of 40 tons at Abutments.

FOUNDATION NOTES

When the foundations for Frame Footings have been excavated to rock, holes 6 feet deep shall be drilled into rock at points designated by the Engineer. 5 From the results obtained, the Bridge Engineer shall determine the final footing elevations.

When excavating for rock foundations, rock shall be line drilled and pre-split. The contractor shall use extreme care so as not to excavate rock below elevations shown on plans. Any additional expense caused by undercutting rock below plans elevations shall be borne by the contractor. See Tennessee Highway Specs. 1968 Edition, Section 204.08, 204.09 & 204.10 A.

BRIDGERAIL NOTES

Build bridgerail according to Standard Dwg. K-38-154A using the following dimensions: Demensions shown are measured along center line of base plates

West Side	N = 15	L = 10'-0"	X = 1'-3 3/8"
East Side	N = 15	L = 10'-0"	X = 1'-5"

6 LIGHTING

Provisions shall be made for placing junction boxes, conduit and light Stand- and base as shown on these Plans. For additional details see Dwg. No. K-82-152 and Lighting Plans.

4 LIST OF DRAWINGS

		DWG. NO.
Layout		K-82-128
Slab Details		K-82-129
Structural Steel Details		K-82-130
Structural Steel Details		K-82-131
Abutment No. 1 Details		K-82-132
Abutment No. 2 Details		K-82-133
Abutment Details		K-82-134
Frame Footing Details		K-82-135
Frame Footing Details		K-82-136
Bill of Steel		K-82-137
Standard Concrete Parapet with Structural Tubing	Std.	K-38-154A
Pile Splice	Std.	H-5-146
Standard Bearing Device Details	Std.	H-5-146
Field Welding Details		K-82-116
Standard Metal Deep Beam Guardrail		RD-R-6A
Light Standard Base Detail		K-82-152
Slab Support Detail 4		H-80-14

2- 48'-0" ROADWAYS

STATE OF TENNESSEE
DEPARTMENT OF HIGHWAYS
NASHVILLE

LAYOUT OF BRIDGE NO. 153

INTERSTATE 65 OVER WEDGEWOOD AVE.

STATION 591 + 50.98

DAVIDSON COUNTY
1970

DESIGNED BY	J.F.K. & H.S.	DATE	March '65
DRAWN BY	E.G.W.	DATE	4-69
TRACED BY		DATE	
CHECKED BY	R.F.C.	DATE	4-69

APPROVED _____

K-82-128

BRIGHTON ENGINEERING COMPANY

MICROFILMED

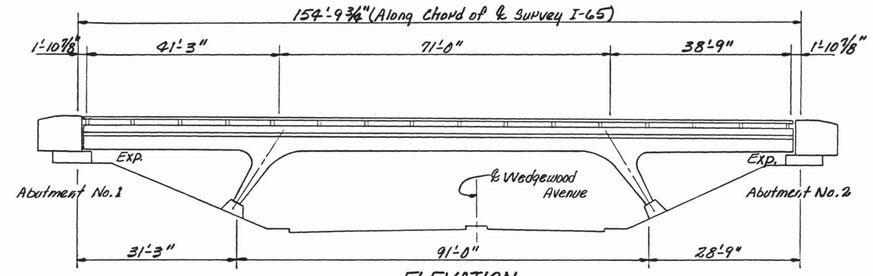

ELEVATION

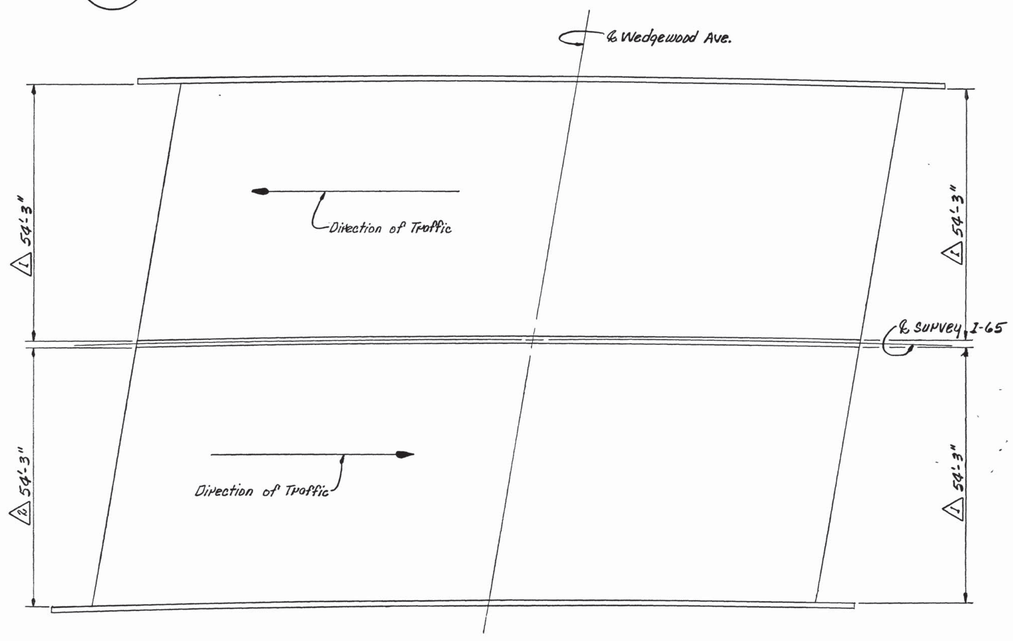

PLAN

Concrete for deck repair shall be Set 45 Alcrete, Speed Crete or a quick setting patching material as approved by the materials and Test Division of the Tennessee Department of Transportation.

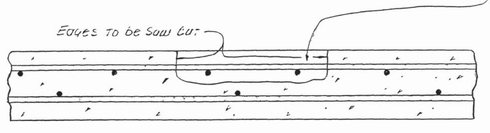

SKETCH SHOWING DECK REPAIR

Remove Concrete in all Delaminated areas to a Depth of 3/4" below the top mat of Reinforcing steel. All Reinforcing Steel in areas of Deck repair shall be Blast Cleaned. Areas of Concrete Removal shall be designated by the Engineer. Deck Repair is to be paid for under Item No. 604-10.50, Bridge Deck Repair

Concrete for deck repair shall be Set 45 Alcrete, Speed Crete or a Quick Setting patching material as approved by the materials and test division of the Tennessee Department of Transportation.

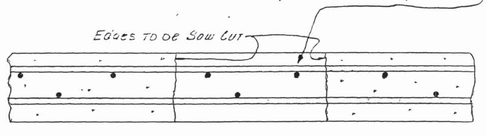

SKETCH SHOWING FULL SLAB DEPTH REPAIR

Note: In areas where the slab is Removed for full Depth. Extreme care shall be taken so as not to Damage Existing Reinforcing Steel. Full Depth Repair of slab shall be paid for under Item No. 604-10.30

DESIGNED BY	DATE
DRAWN BY W. Grover	DATE 7-82
SUPERVISED BY W. Gilliland & Gentry	DATE 7-82
CHECKED BY Gentry & Gilliland	DATE 7-82

⚠1 Abutment Backwall & End of Approach Pavement to be Repaired as shown in "Section at Bridge Ends."

SCOPE OF WORK (GENERAL)

Existing deck to be repaired as shown on sketch below.
Existing Bridge deck to be sealed with System "A" or System "B" Bridge deck Sealant, and asphalt Overlay.
Existing Abutment Backwalls and Bridge End of Approach Pavements to be Repaired as shown below.

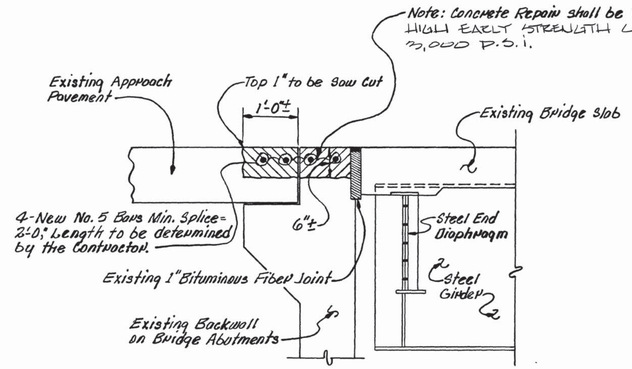

SECTION AT BRIDGE ENDS

(Typical Both Ends of Bridge)

Note: Areas Shown for Concrete repair to be as shown in Plan view on this Sheet. Care shall be taken when removing existing Concrete so as nor to Damage Existing Reinforcing Steel. Cost of Concrete repairs to be Paid for under Item No. 604-10.01.

PROJECT NO.	YEAR	SHEET NO.
I-65-2(58) 80	1982	2 EE

REVISIONS

NO	DATE	BY	BRIEF DESCRIPTION

REV. 11-19-82: THIS SHEET ADDED TO PLANS.

GENERAL NOTES

Specifications: Standard Specifications for Road and Bridge Construction of the Tennessee Department of Transportation (March 1981 Edition)
Bridge Deck Sealant: System "A" or System "B." See Standard Specifications Art. 617 and and Art. 906.04.

LIST OF DRAWINGS	DWG. No.	LAST REV. DATE
Bridge Repair	K-82-128A	

	Item No	Item	Quantity	Unit
(1)	604-10.01	Concrete Repairs	1	L.S.
	604-10.30	Bridge Deck Repairs (Full Depth of Slab)	4	S.Y.
	604-10.50	Bridge Deck Repairs (Partial Depth of Slab)	96	S.Y.
	617-01	Bridge Deck Sealant	1,915	S.Y.
(2)	604-10.32	EXPANSION JOINT REPAIR	225	L.F

ESTIMATED QUANTITIES

(1) Concrete Repair, Item No. 604-10.01 INCLUDES REPAIR TO ABUTMENT BACKWALL ENDS OF BRIDGE SLAB END OF CONCRETE APPROACH SLAB as shown in "Section at Bridge Ends" above. Limits For this Repair are shown in Plan View, this sheet. Item No. 604-10.01 includes all Concrete Removal and Repouring and New Reinforcing Steel.

(2) FOR EXPANSION JOINT REPAIR SEE REFERENCE DRAWING M-139-137, DETAIL "D" SHOWING EXPANSION JOINT REPAIR FOR EXISTING BITUMINOUS FIBER JOINT. ON CONCRETE PARAPET BRIDGE RAIL AND CONCRETE MEDIAN (PARAPET) THE NEW EXPANSION JOINT MATERIAL SHALL BE INSTALLED 1'-0" UP THE FACE OF EXISTING PARAPETS. REMOVE PORTION OF BRIDGE RAILS & MEDIANS AND REPOUR AS NECESSARY. COST OF INSTALLING NEW JOINTS IN THESE AREAS SHALL BE PAID FOR IN ITEM NO. 604-10.32 (EXPANSION JOINT REPAIR).

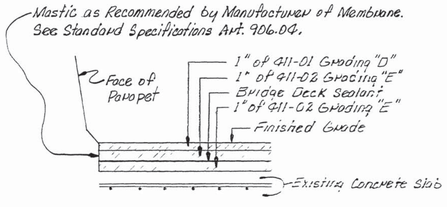

BRIDGE DECK SEALANT DETAIL

STATE OF TENNESSEE
DEPARTMENT OF TRANSPORTATION
BUREAU OF HIGHWAYS

BRIDGE REPAIR No. 23
I-65 OVER WEDGEWOOD AVENUE
BRIDGE No. 19-I65-7.23
DAVIDSON COUNTY
1982

CORRECT Walter L. Fowler
ENGINEER OF STRUCTURES

APPROVED Lewis Evans
DIRECTOR OF HIGHWAYS

K-82-128A

FED ROAD DIST NO	STATE	FED AID PROJ NO	FISCAL YEAR	SHEET NO	TOTAL SHEETS
3	TENN	I-65-2(33)81	1970	160	345

1 R.M.D. 5-25-70 Light Std. Base.

3 R.M.D. 8-31-70 Note revised, added longitudinal const. JOINT

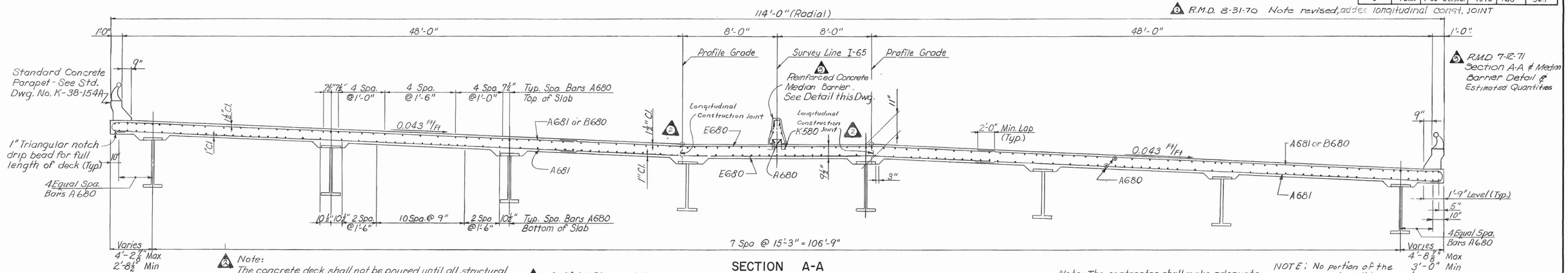

3 RMD 7-12-71 Section A-A & Median Barrier Detail & Estimated Quantities

2 Note: The concrete deck shall not be poured until all structural steel is erected and all welding or bolting complete. When pouring slab, provisions shall be made for setting steel for concrete parapet (For location See Std. Dwg. K-38-154 A). and bars K580 for Reinforced Concrete Median Barrier

1 ℄ Light Standard Base Sta. 591 + 70 (For details see Drawing No. K-82-152

SECTION A-A

Note: The outside faces of the Slab, Bridgerail and Median Guardrail Pedestal shall conform to horizontal curve.

Note: The contractor shall make adequate provisions during placement of slab to prevent the exterior frame from twisting.

NOTE: No portion of the parapet shall be poured until the entire deck slab is in place.

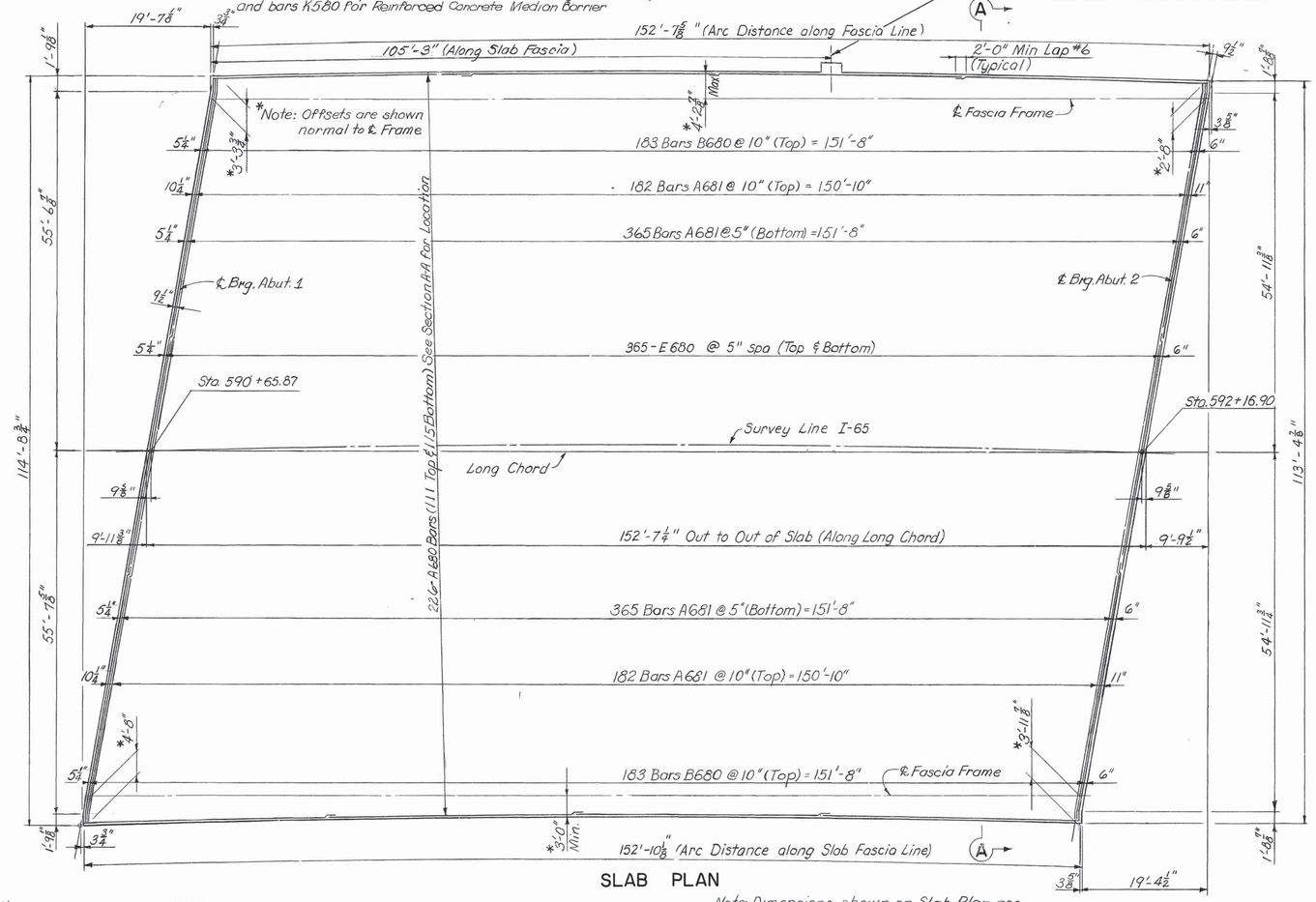

SLAB PLAN

Note: Dimensions shown on Slab Plan are Perpendicular or Parallel to the Long Chord unless otherwise shown or noted.

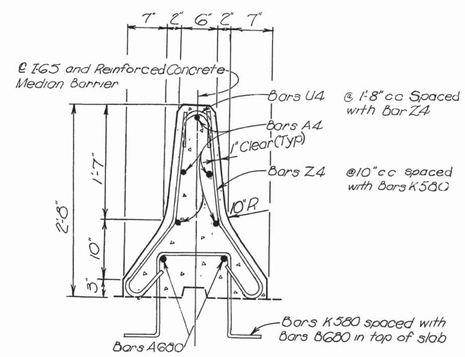

REINFORCED CONCRETE MEDIAN BARRIER DETAIL

3

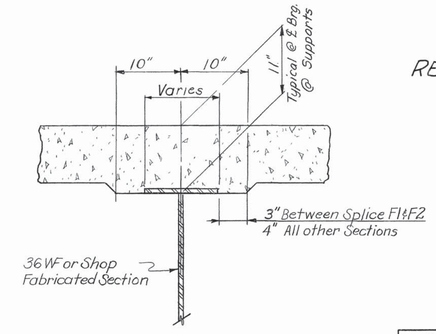

SLAB DETAIL AT FRAME

ESTIMATED QUANTITIES 3

ITEM	Concrete - Class "A" Cu Yds	Reinforcing Steel Lbs.
Superstructure	517.3	185,565

STATE OF TENNESSEE
DEPARTMENT OF HIGHWAYS
NASHVILLE

SLAB DETAILS

INTERSTATE 65 OVER WEDGEWOOD AVE.

STATION 591 + 50.98

DAVIDSON COUNTY
1970

DESIGNED BY	J.F.K.	DATE	10-68
DRAWN BY	C.D.C.	DATE	11-68
TRACED BY		DATE	
CHECKED BY	R.F.C.	DATE	4-69

APPROVED _____

K-82-129

BRIGHTON ENGINEERING COMPANY

FED. ROAD DIST. NO.	STATE	FED. AID PROJ. NO.	FISCAL YEAR	SHEET NO.	TOTAL SHEETS
3	TENN	I-65-2(33)81	1970	161	345

1 8-31-70 R.M.D. Added Plan Showing Pouring Sequence & added note

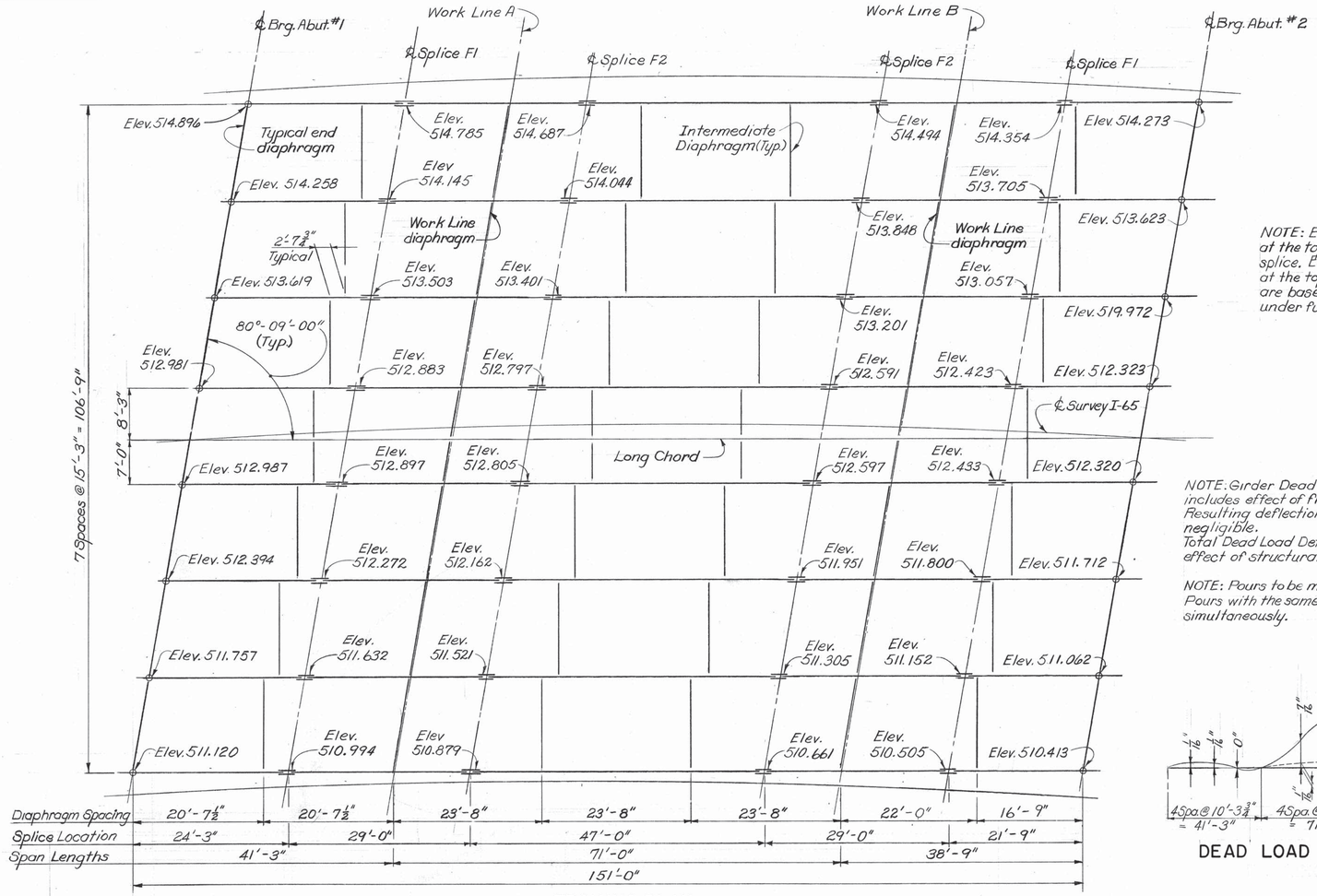

FRAMING PLAN

NOTE: Elevations shown on Framing Plan are at the top surface of the thicker flange at each splice. Elevations at the ℄ Brg. Abutments are at the top surface of the 36 WF 135. All elevations are based on frames being in final position under full dead load.

NOTE: Girder Dead Load Correction Curve includes effect of frame and diaphragms. Resulting deflections in spans 1 and 3 are negligible.
Total Dead Load Deflection Curve includes effect of structural steel and slab.

NOTE: Pours to be made in numerical sequence. Pours with the same designation may be made simultaneously.

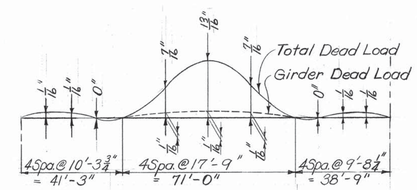

DEAD LOAD CORRECTION

STRUCTURAL STEEL NOTES

SHOP INSPECTION OF STEEL STRUCTURES: SEE TENNESSEE STANDARD SPECIFICATIONS SECTION 602.04

APPROVAL OF MATERIALS: No fabrication shall be started until the materials involved have been approved by the Tennessee Highway Division of Tests.

IDENTITY OF MAIN MATERIALS: SEE TENNESSEE STANDARD SPECIFICATION SECTION 602.16

STRUCTURAL STEEL: ALL STRUCTURAL STEEL SHALL CONFORM TO ASTM A36, UNLESS OTHERWISE NOTED.

STUD SHEAR CONNECTORS: SEE TENNESSEE STANDARD SPECIFICATIONS SECTION 602.14

FIELD CONNECTIONS: Field connections shall be welded and 7/8" ϕ high strength bolts as shown on plans. High strength bolts shall be ASTM A325, see A.A.S.H.O. Spec. Article 2.10.20. All high strength bolted connections are friction type.

WELDING: A.W.S. CURRENT SPECIFICATIONS AND TENNESSEE STANDARD SPECIFICATIONS SECTION 602.13.

CAMBER: Girders shall be cambered to compensate for dead load deflection. See diagram this drawing.

DIMENSIONS: Dimensions shown are for a normal temperature of 70°F with dead load on the structure. Layout dimensions are horizontal measurements.

PAINT: SEE TENNESSEE HIGHWAY STANDARD SPECIFICATIONS SECTION 603. SYSTEM B-SILICO CHROMATE

BEARING DEVICES: See Standard Dwg. No. H-5-14b
FOR GENERAL NOTES: See Dwg. No. K-82-128
FOR ADDITIONAL STRUCTURAL STEEL DETAILS: See Dwg. No. K-82-131
FIELD WELDING: For Field Welding Details for optional splice in frame legs, See Dwg. No. K-82-116.

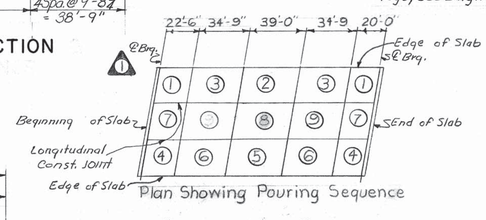

Plan Showing Pouring Sequence

1 Note: Pours on fascia side of constructions may be completed before other pours are made. Alternate pouring sequence may be submitted for approval.

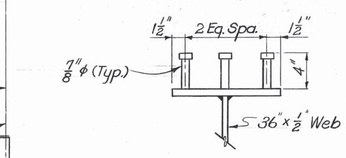

STUD DETAIL

NOTE: Studs shall be placed in sets of 3 and spaced as shown on this sheet.

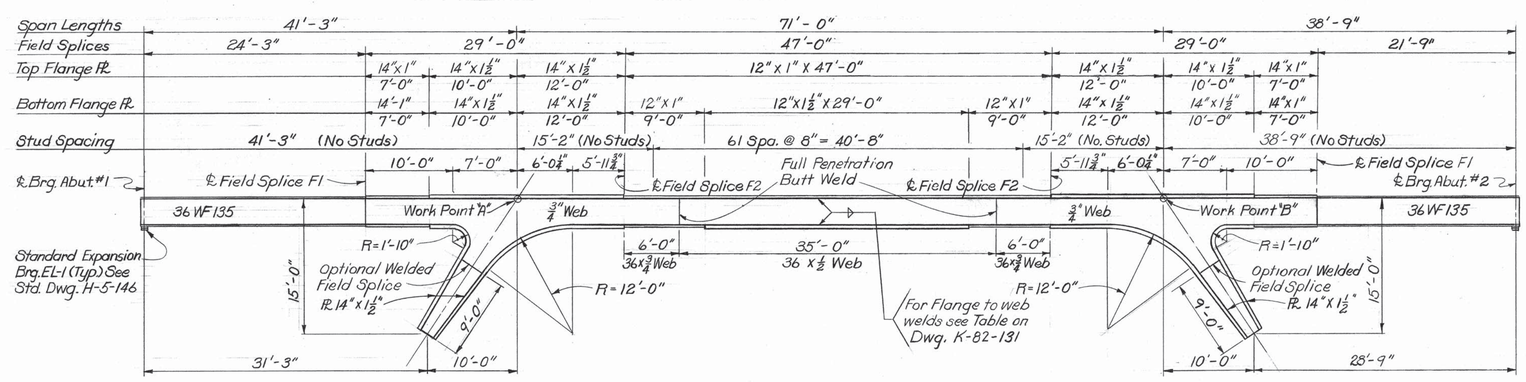

ELEVATION

NOTE: Ends of girders to be vertical in final position under full dead load.

STATE OF TENNESSEE
DEPARTMENT OF HIGHWAYS
NASHVILLE

STRUCTURAL STEEL DETAILS

INTERSTATE 65 OVER WEDGEWOOD AVE.

STATION 591 + 50.98

DAVIDSON COUNTY

1970

APPROVED _____

K-82-130

DESIGNED BY J.F.K. DATE 11-68
DRAWN BY C.A.W. DATE 2-69
TRACED BY DATE
CHECKED BY F.A.B. DATE 4-69

BRIGHTON ENGINEERING COMPANY

MICROFILMED

FED. ROAD DIST. NO.	STATE	FED. AID PROJ. NO.	FISCAL YEAR	SHEET NO.	TOTAL SHEETS
3	TENN	I-65-2(93)81	1970	162	345

1 R.M.D. 8-31-70 Section B-B
Elevation End Diaphragm
2 Rev D 21-June-71 Bolt & hole dia. revised

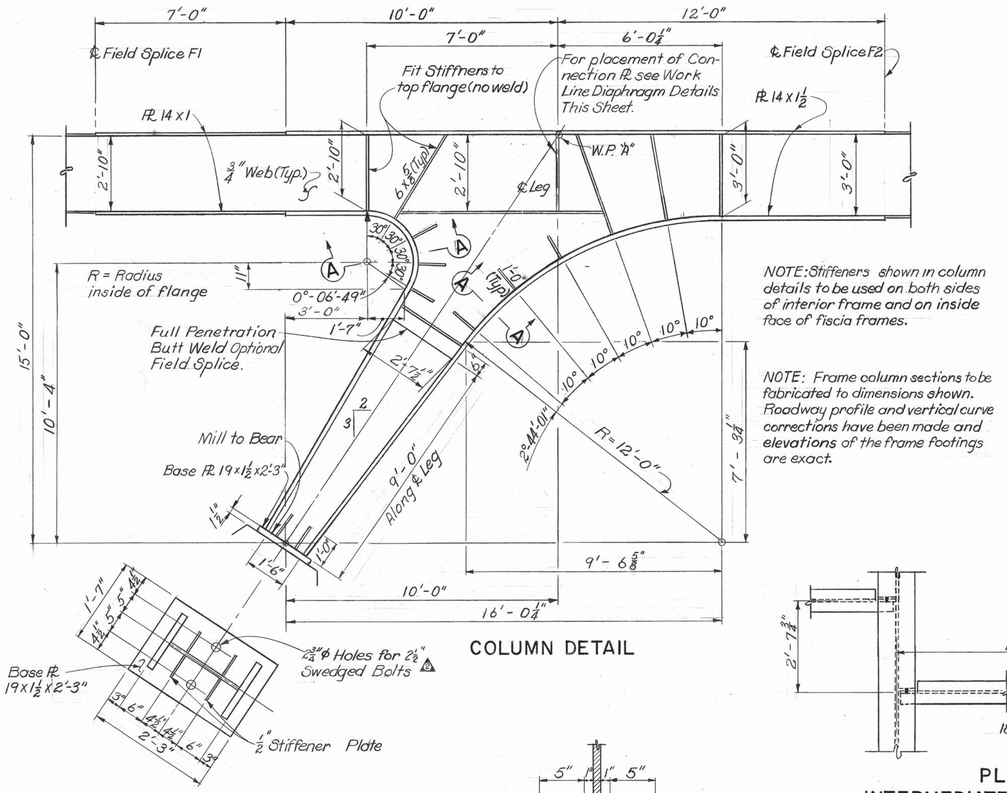

NOTE: Stiffeners shown in column details to be used on both sides of interior frame and on inside face of fascia frames.

NOTE: Frame column sections to be fabricated to dimensions shown. Roadway profile and vertical curve corrections have been made and elevations of the frame footings are exact.

COLUMN DETAIL

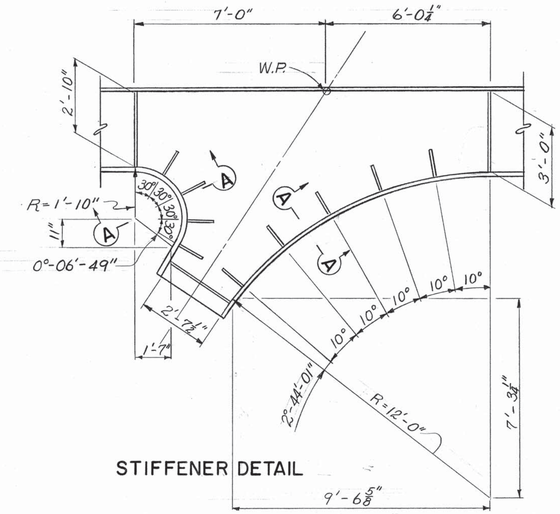

STIFFENER DETAIL

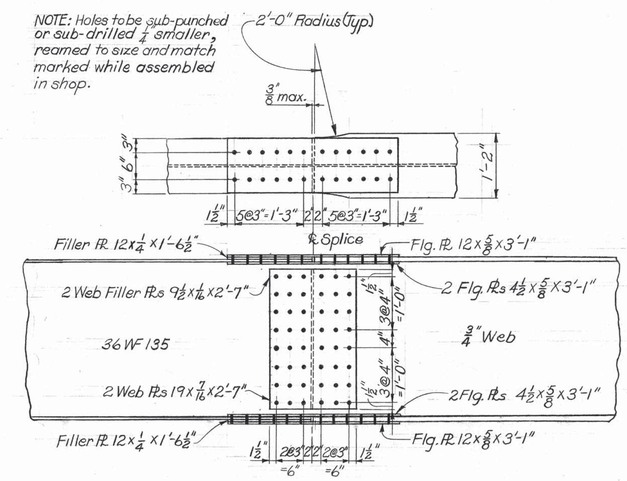

SPLICE F-1

BASE PLATE DETAIL

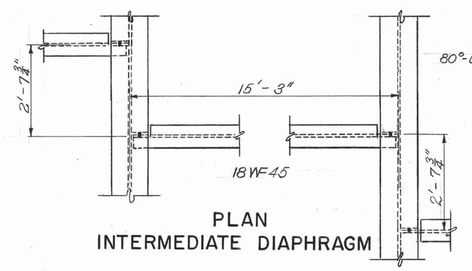

PLAN
INTERMEDIATE DIAPHRAGM

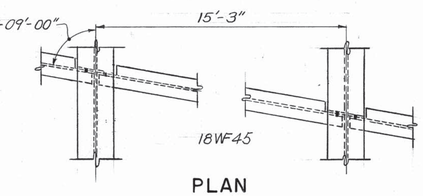

PLAN
DIAPHRAGM AT WORK LINE

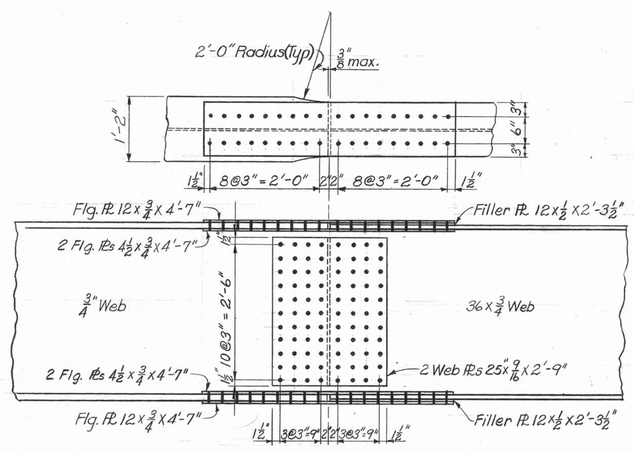

SPLICE F-2

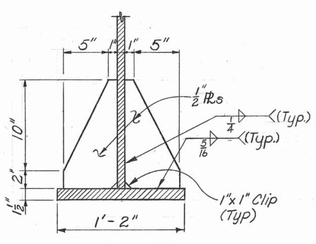

SECTION A-A

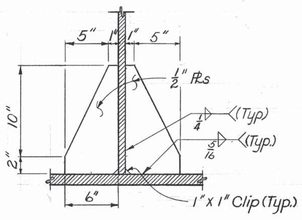

BASE PLATE STIFFENER

ELEVATION
INTERMEDIATE DIAPHRAGM

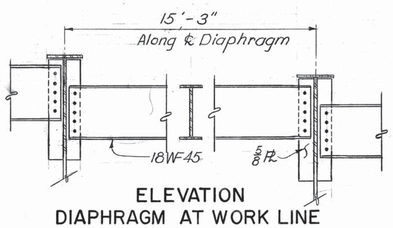

ELEVATION
DIAPHRAGM AT WORK LINE

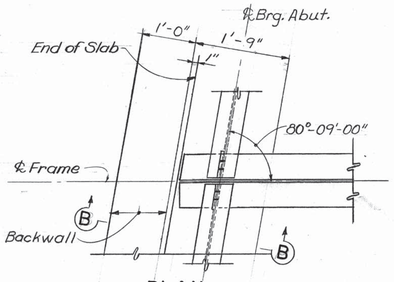

PLAN
END DIAPHRAGM

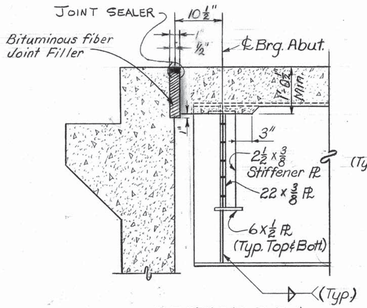

SECTION B-B

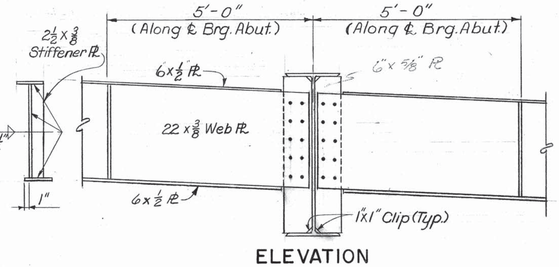

ELEVATION
END DIAPHRAGM

MINIMUM FILLET WELD

Material Thickness of Thicker Part Joined	Maxi. Fillet Weld Size
To ½" Inclusive	3/16" *
Over ½" To ¾"	¼"
Over ¾" To 1½"	5/16"
Over 1½" To 2¼"	⅜"

* Also See AASHO Article 1.7.27

DESIGNED BY J.F.K. DATE 11-68
DRAWN BY E.J.W. DATE 2-69
TRACED BY DATE
CHECKED BY F.A.B. DATE 4-69

STATE OF TENNESSEE
DEPARTMENT OF HIGHWAYS
NASHVILLE

STRUCTURAL STEEL DETAILS

INTERSTATE 65 OVER WEDGEWOOD AVE.

STATION 591 + 50.98

DAVIDSON COUNTY

1970

APPROVED

K-82-131

BRIGHTON ENGINEERING COMPANY

MICROFILMED

FED. ROAD DIST. NO	STATE	FED. AID PROJ. NO.	FISCAL YEAR	SHEET NO	TOTAL SHEETS
3	TENN	I-65-2(33)81	1970	163	345

NOTE: When pouring Abutment Cap, Provisions shall be made for setting anchor bolts for bearing devices. If the contractor elects to drill the holes for the anchor bolts, the reinforcing steel shall be spaced so as not to interfere with the drilling. Bolt Projection = $4\frac{1}{2}''$ For Location See Details This Sheet.

△1 R.M.D 5-25-70 Wingpost Revised.

△2 R.M.D 8-31-70 Drainage details WINGWALL "B" added and Sect. A-A revised.

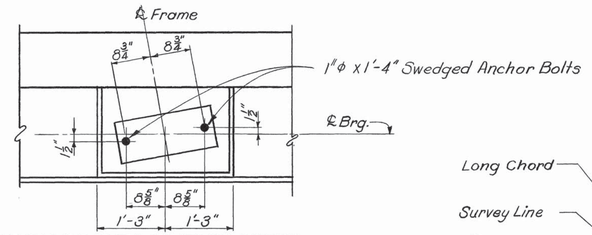

ANCHOR BOLT LOCATION DETAIL

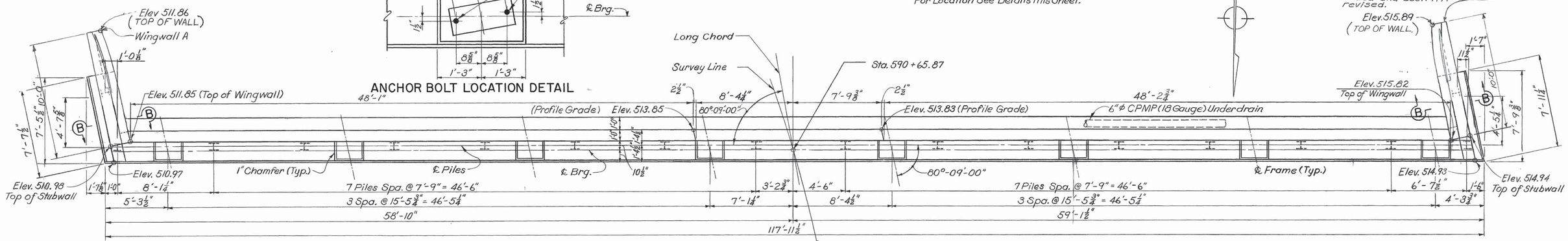

△1 PLAN

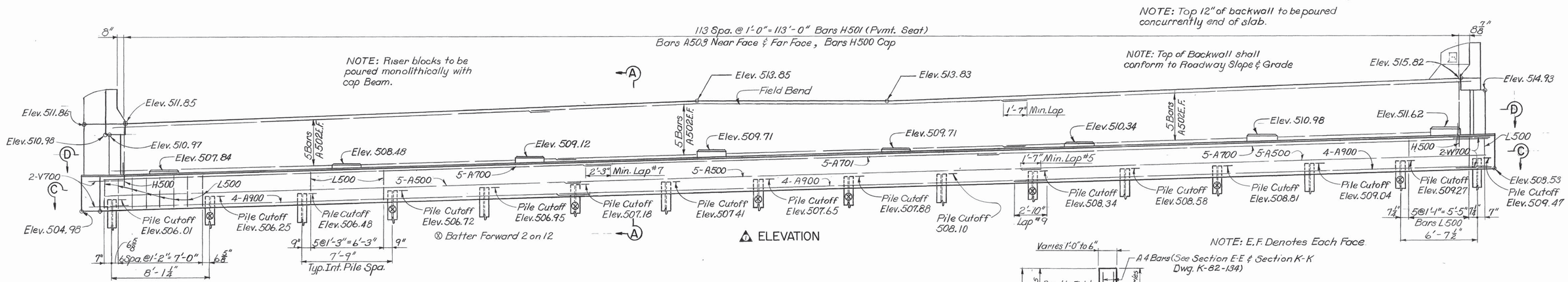

△1 ELEVATION

NOTE: E.F. Denotes Each Face

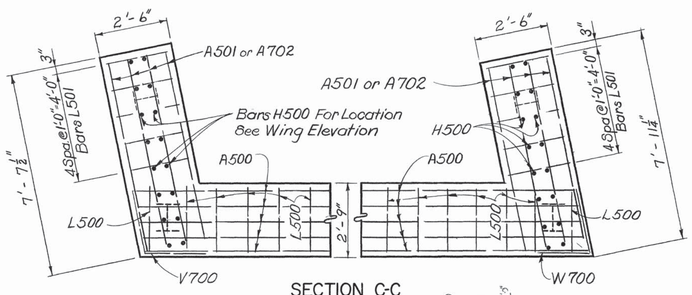

SECTION C-C

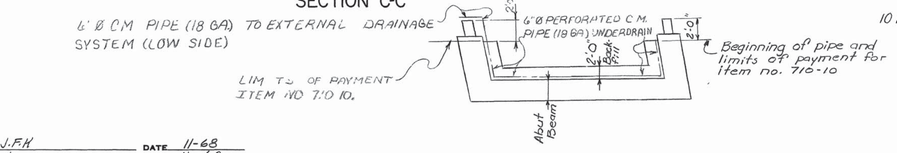

PLAN OF DRAINAGE DETAILS △2

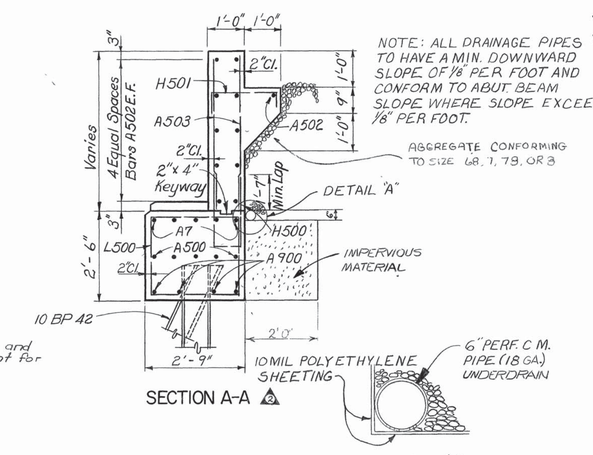

NOTE: ALL DRAINAGE PIPES TO HAVE A MIN. DOWNWARD SLOPE OF 1/8" PER FOOT AND CONFORM TO ABUT. BEAM SLOPE WHERE SLOPE EXCEEDS 1/8" PER FOOT.

AGGREGATE CONFORMING TO SIZE 68, 7, 78, OR 8

SECTION A-A △2

DETAIL "A"

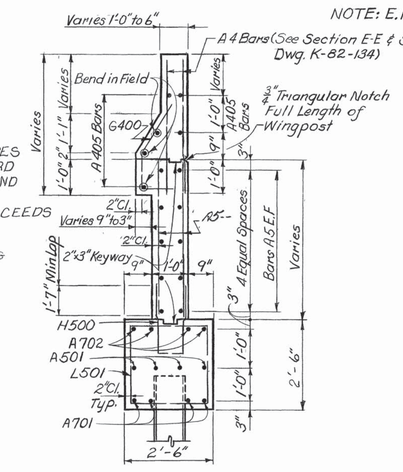

△1 SECTION B-B

△1 ESTIMATED QUANTITIES *

Item	Concrete Class A Cu. Yds.	Reinforcing Steel Lbs.
Abutment #1	64.5	9,201

* Includes Wingpost Quantities

STATE OF TENNESSEE
DEPARTMENT OF HIGHWAYS
NASHVILLE

ABUTMENT NO. 1 DETAILS

INTERSTATE 65 OVER WEDGEWOOD AVE.

STATION 591 + 50.98

DAVIDSON COUNTY

1970

DESIGNED BY	J.F.K	DATE	11-68
DRAWN BY	E.J.W.	DATE	11-68
TRACED BY		DATE	
CHECKED BY	RFC	DATE	4-69

APPROVED _____

K-82-132

BRIGHTON ENGINEERING COMPANY

MICROFILMED

FED ROAD DIST NO	STATE	FED AID PROJ NO	FISCAL YEAR	SHEET NO	TOTAL SHEETS
3	TENN	I-65-2(33)81	1970	164	345

△1 R.M.D 5-25-70 Wingpost Revised.

NOTE: When pouring Abutment Cap, Provisions shall be made for setting anchor bolts for bearing devices. If the contractor elects to drill the holes for the anchor bolts, the reinforcing steel shall be spaced so as not to interfere with the drilling. Bolt Projection = 4½"
For Location See Detail Dwg. No. K-82-132

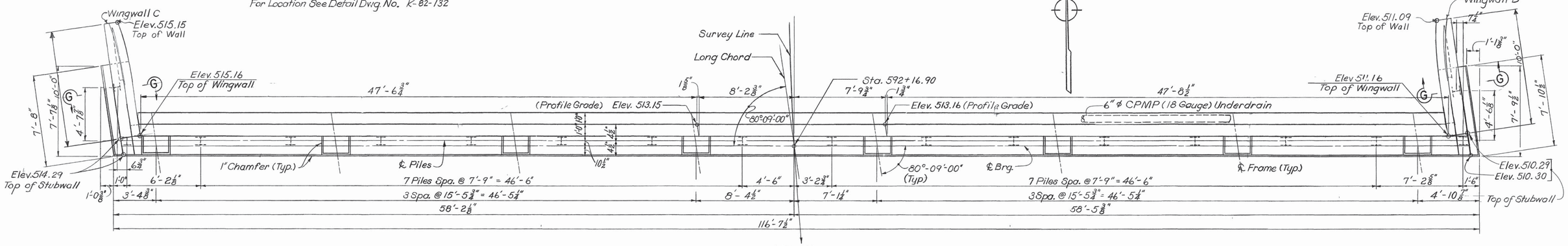

△1 PLAN

NOTE: Top 12" of backwall to be poured concurrently with end of slab.

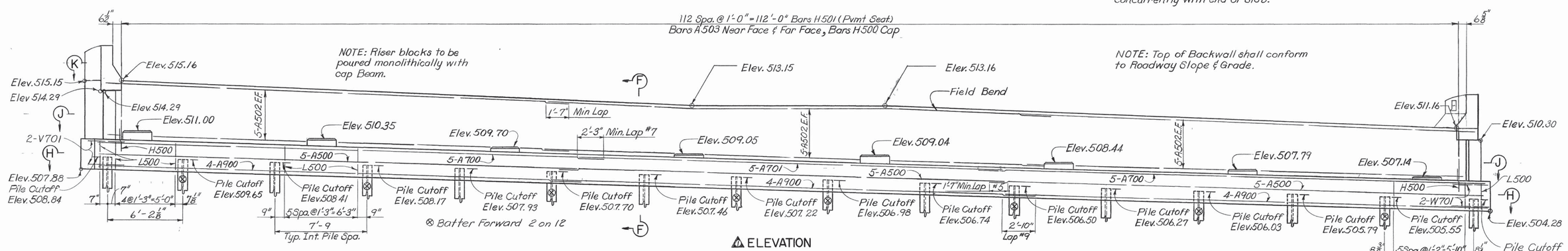

△1 ELEVATION

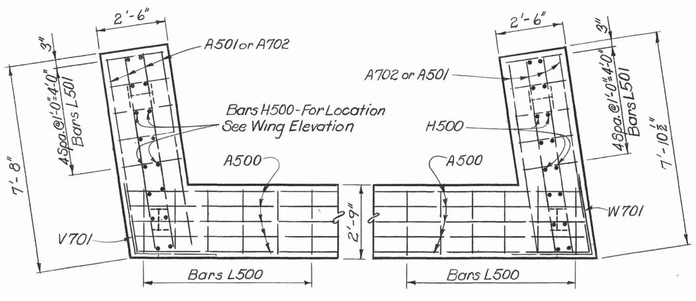

SECTION H-H

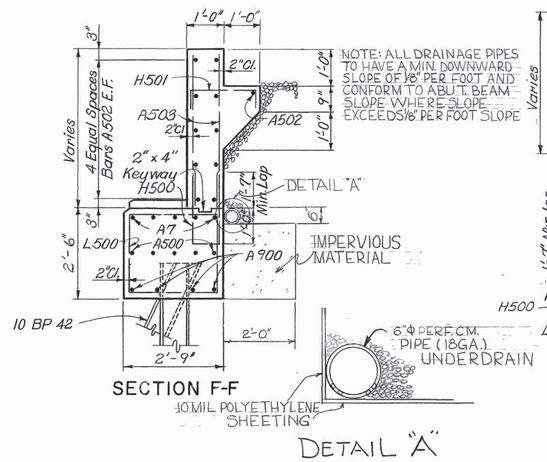

SECTION F-F

DETAIL "A"

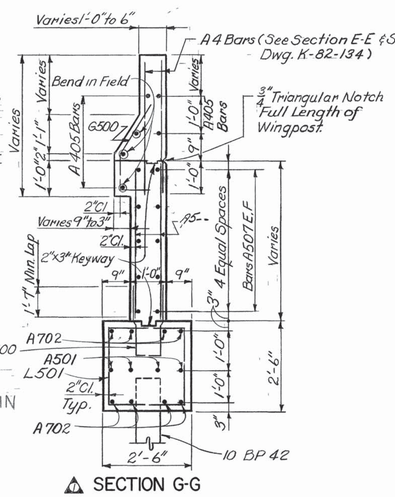

△1 SECTION G-G

NOTE: E.F. Denotes Each Face

*Includes Wingpost Quantities

△1 ESTIMATED QUANTITIES*

Item	Concrete Class "A" Cu. Yds.	Reinforcing Steel Lbs.
Abutment #2	63.7	9,170

STATE OF TENNESSEE
DEPARTMENT OF HIGHWAYS
NASHVILLE

ABUTMENT NO. 2 DETAILS

INTERSTATE 65 OVER WEDGEWOOD AVE.

STATION 591 + 50.98

DAVIDSON COUNTY

1970

DESIGNED BY	J.F.K	DATE	11-68
DRAWN BY	E.J.W.	DATE	11-68
TRACED BY		DATE	
CHECKED BY	RFC	DATE	4-69

APPROVED

K-82-133

BRIGHTON ENGINEERING COMPANY

MICROFILMED

FED. ROAD DIST. NO.	STATE	FED. AID PROJ. NO.	FISCAL YEAR	SHEET NO.	TOTAL SHEETS
3	TENN	I 65-2(39)81	1970	165	345

1 R.M.D. 5-25-70 Wingpost Revised

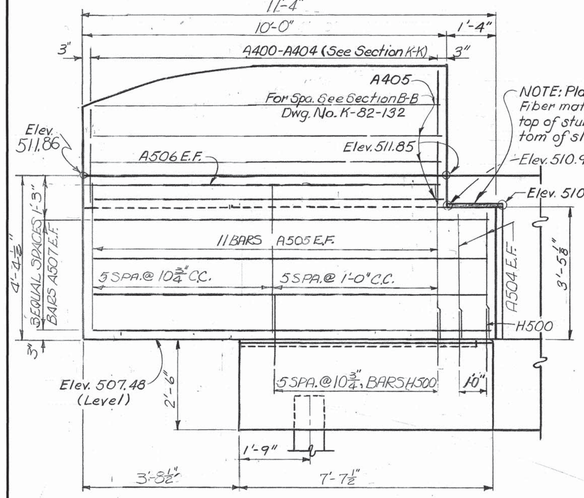

1 ELEVATION—WING A

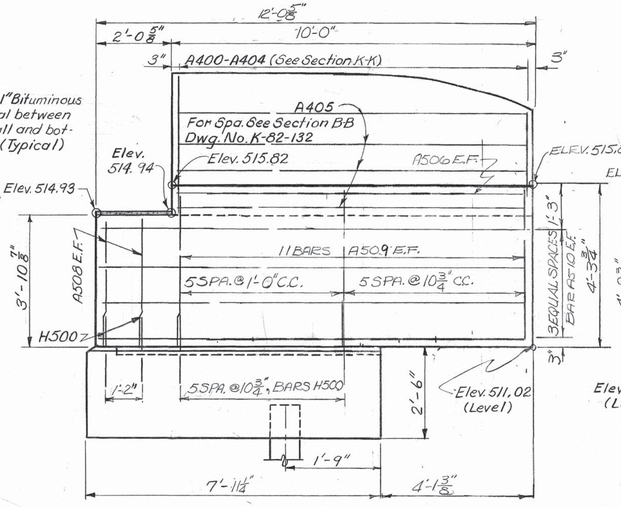

1 ELEVATION—WING B

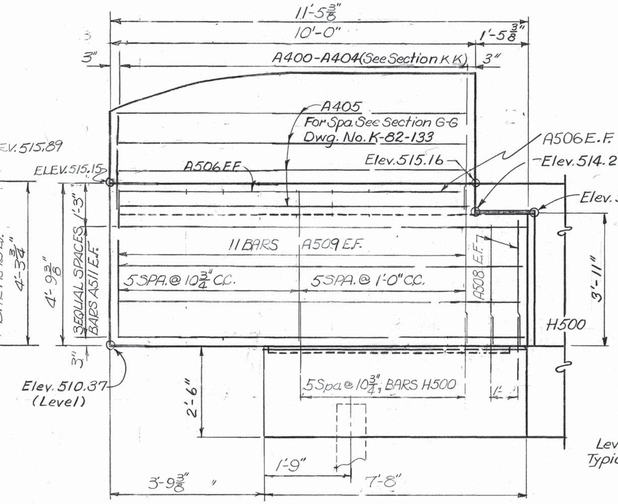

1 ELEVATION—WING C

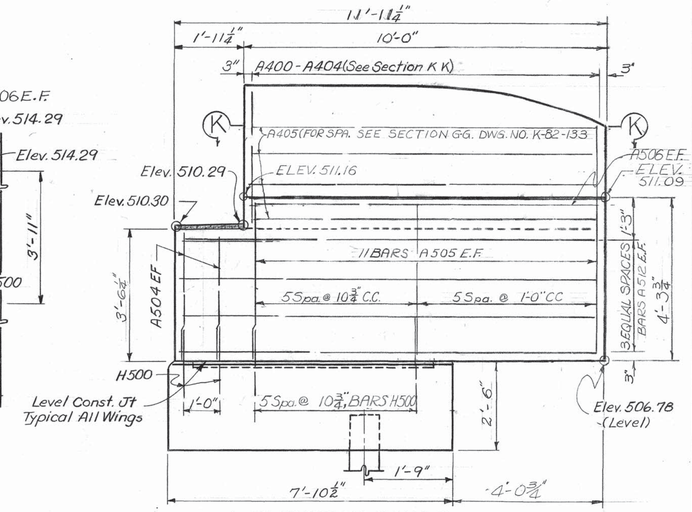

1 ELEVATION—WING D

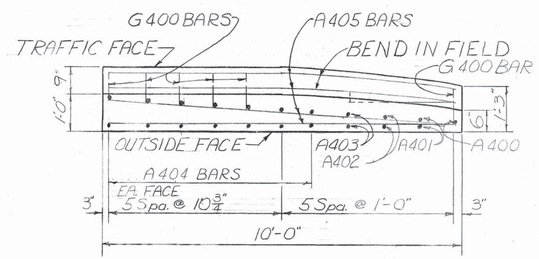

1 SECTION K-K
TYP. THRU ALL WING POST

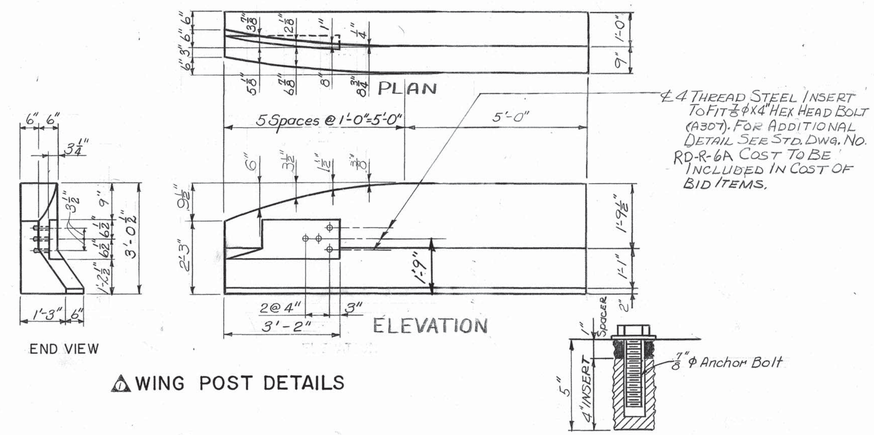

1 WING POST DETAILS

1 THREADED INSERT
NOTE: SPACER, INSERT & BOLT TO BE CAST IN PLACE

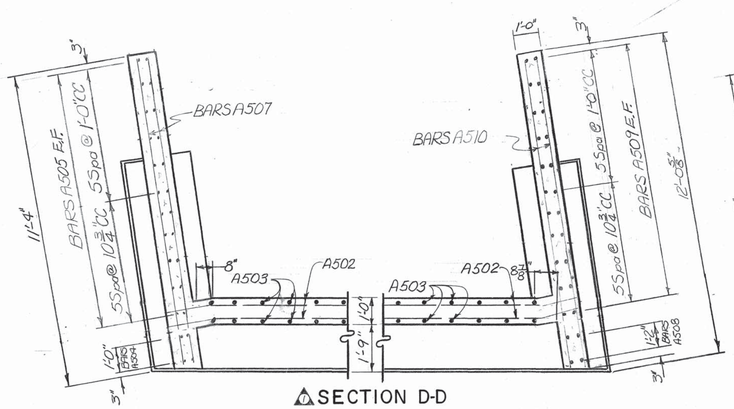

1 SECTION D-D

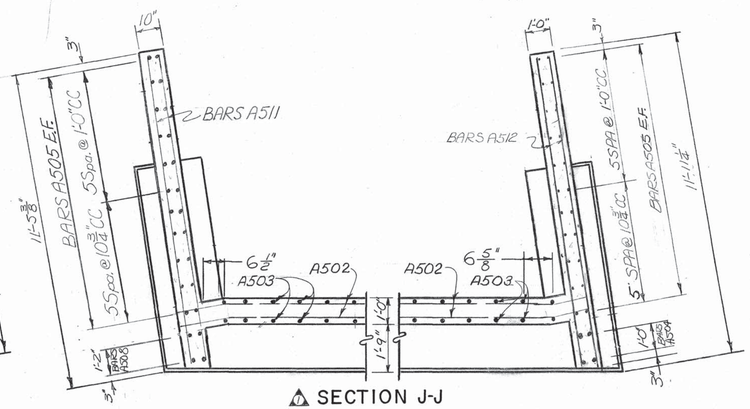

1 SECTION J-J

STATE OF TENNESSEE
DEPARTMENT OF HIGHWAYS
NASHVILLE

ABUTMENT DETAILS

INTERSTATE 65 OVER WEDGEWOOD AVE.

STATION 591 + 50.98

DAVIDSON COUNTY

1970

DESIGNED BY	JFK	DATE	11-68
DRAWN BY	EJW	DATE	11-68
TRACED BY		DATE	
CHECKED BY	RFC	DATE	1-69

APPROVED

K-82-134

BRIGHTON ENGINEERING COMPANY

MICROFILMED

FED. ROAD DIST. NO.	STATE	FED. AID PROJ. NO.	FISCAL YEAR	SHEET NO.	TOTAL SHEETS
3	TENN	I-65-2(33)81	1970	166	345

△1 R.M.D. 8-31-70 Dimensions added
△2 R.M.D. 4-7-71 REVISED DIMENSIONS

NOTE: For Section D-D See Dwg. No. K-82-136.
For Table of Elevations See Dwg. No. K-82-136.

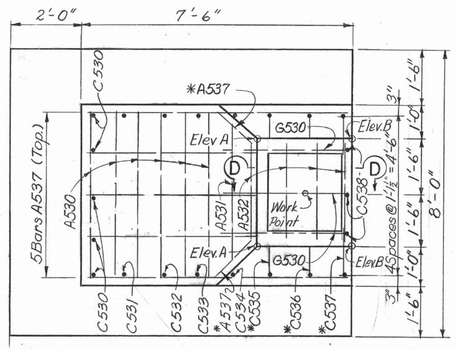

PLAN – FOOTINGS A1 THRU A8

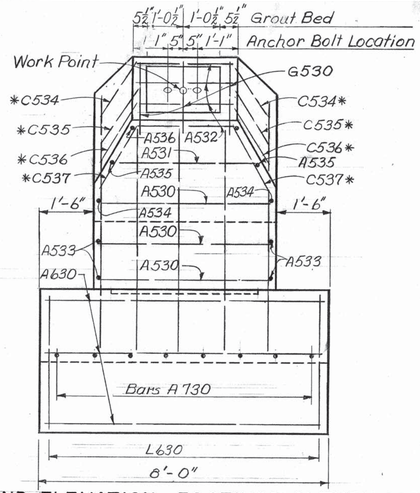

END ELEVATION – FOOTINGS A1 THRU A8

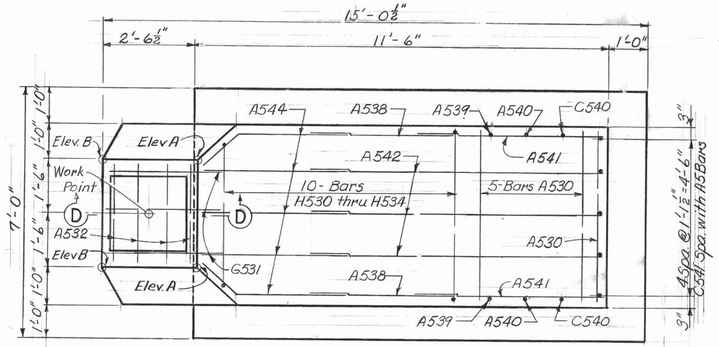

PLAN – FOOTINGS B1 THRU B4

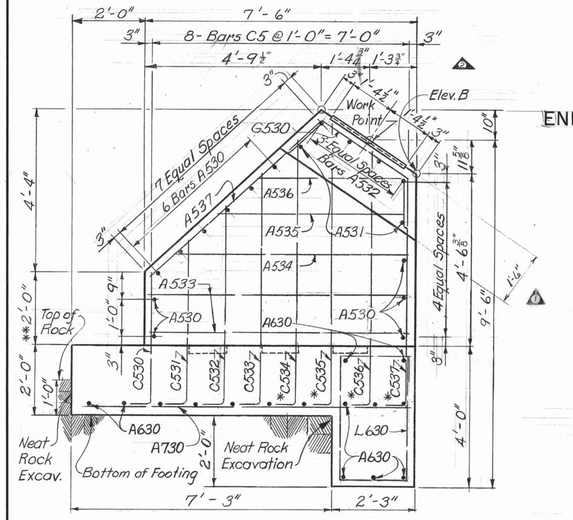

SIDE ELEVATION – FOOTINGS A1 THRU A8

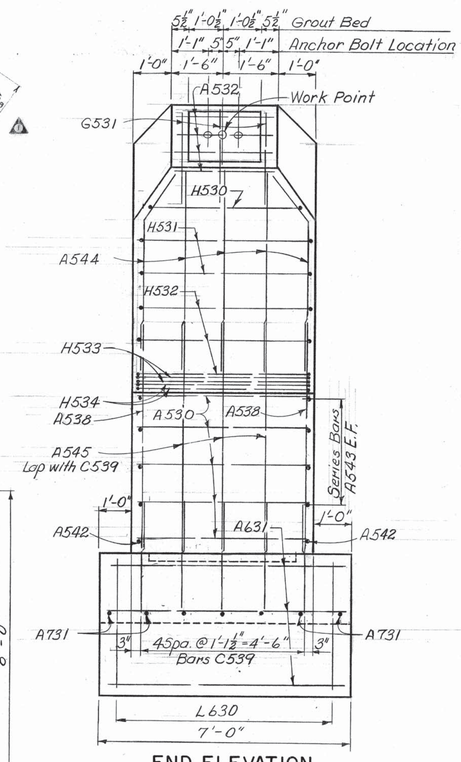

END ELEVATION
FOOTINGS B1 THRU B4

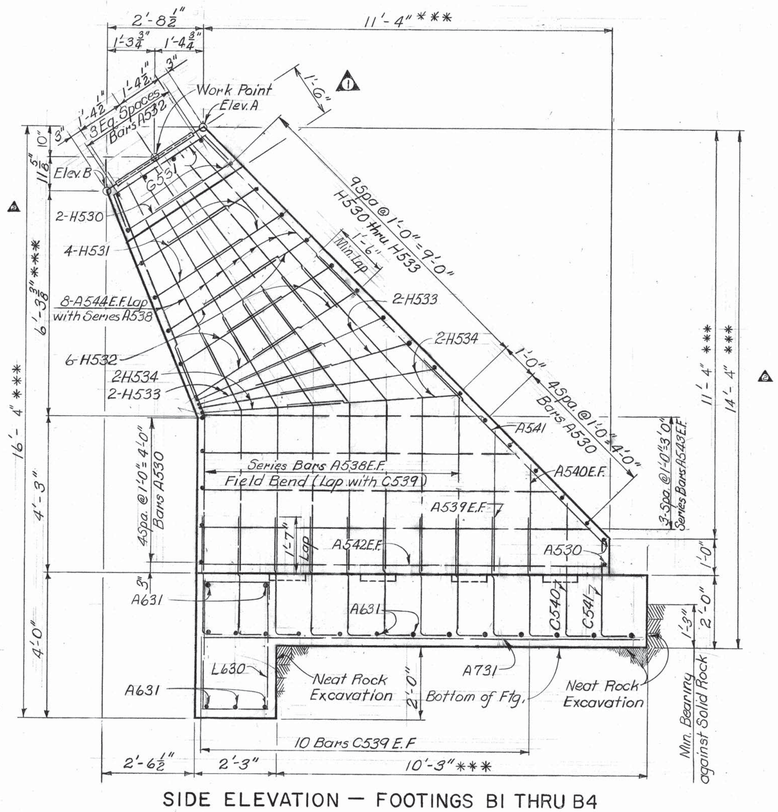

SIDE ELEVATION – FOOTINGS B1 THRU B4

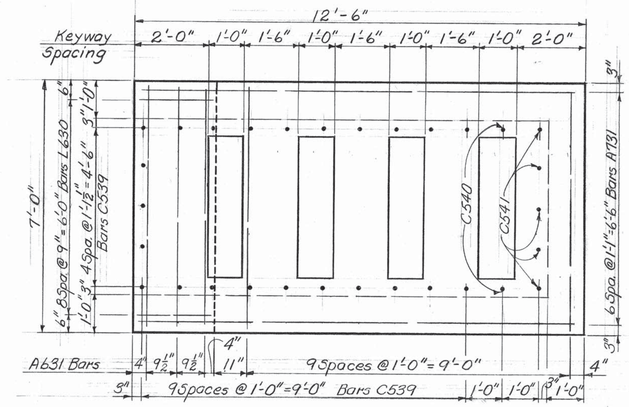

FOUNDATION PLAN – FOOTINGS B1 THRU B4

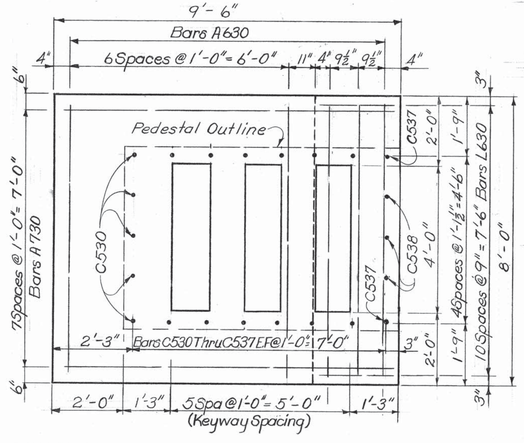

FOUNDATION PLAN – FOOTINGS A1 THRU A8

** NOTE: Adjust footing elevations for A1 thru A8 by varying this dimension and changing length of bars C530 thru C538.

* Field Bend these Bars
E.F Denotes Each Face

*** NOTE: Adjust footing elevations for B1 thru B4 by adjusting these dimensions equally for any individual footing and changing length of bars A542, A543 and A544.

NOTE: Series bars A538 and A543 form near and far face bars after cutting. See cutting diagram on Bill of Steel, Dwg. K-82-137.

ESTIMATED QUANTITIES
— PER FOOTING —

Item	Concrete ⊛ Class "A" Cu. Yds.	Reinforcing Steel Lbs.
Frame Footing A1 thru A8	13.2	841
Frame Footing B1 thru B4	23.7	1422

⊛ Includes Grout Bed

STATE OF TENNESSEE
DEPARTMENT OF HIGHWAYS
NASHVILLE

FRAME FOOTING DETAILS

INTERSTATE 65 OVER WEDGEWOOD AVE.

STATION 591 + 50.98

DAVIDSON COUNTY

1970

DESIGNED BY	J.F.K.	DATE	11-68
DRAWN BY	E.F.W.	DATE	2-69
TRACED BY		DATE	
CHECKED BY	RFC	DATE	4-69

APPROVED _____

K-82-135

BRIGHTON ENGINEERING COMPANY

FED ROAD DIST. NO	STATE	FED. AID PROJ. NO.	FISCAL YEAR	SHEET NO	TOTAL SHEETS
3	TENN	I-65-2(93)81	1970	367	345

△1 R.M.D. 8-31-70 Notes Section D-D Dimension side elevation.
△2 RMD 9-4-70 Section D-D revised bolt proj. & added leveling nut.
△3 R.M.D. 4-8-71 REVISED DIMENSIONS AND ELEVATIONS

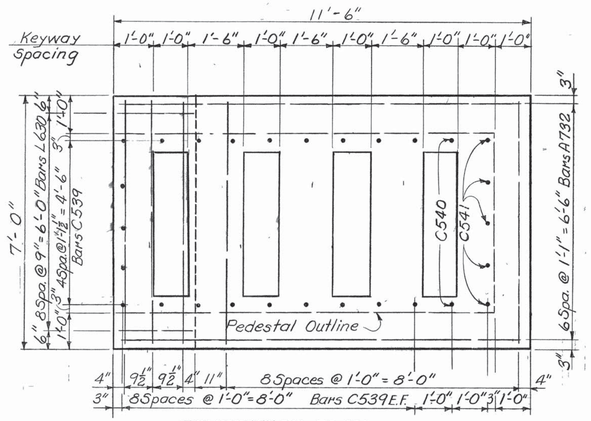

FOUNDATION PLAN

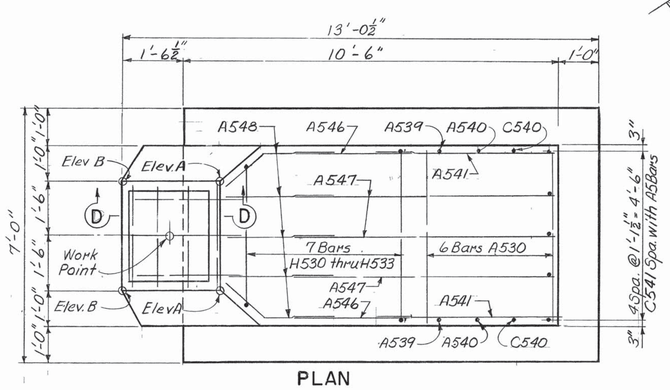

PLAN

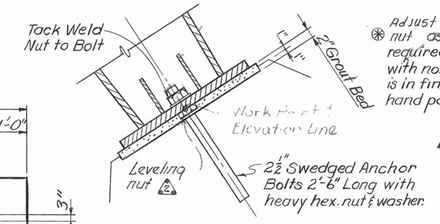

SECTION D-D △1

Adjust leveling nut ⊛ as required to set base Pl. to required elevation. Fill grout bed with non-shrink grout after frame is in final position. Grout may be hand packed.

△1 NOTE: When pouring the frame footings provisions shall be made for setting anchor bolts. If the contractor elects to drill the holes for the anchor bolts, the reinforcing steel shall be placed so as not to interfere with the drilling. The bolts shall be placed and grouted prior to erecting the frames. Bolt projection = 3½" + Nut

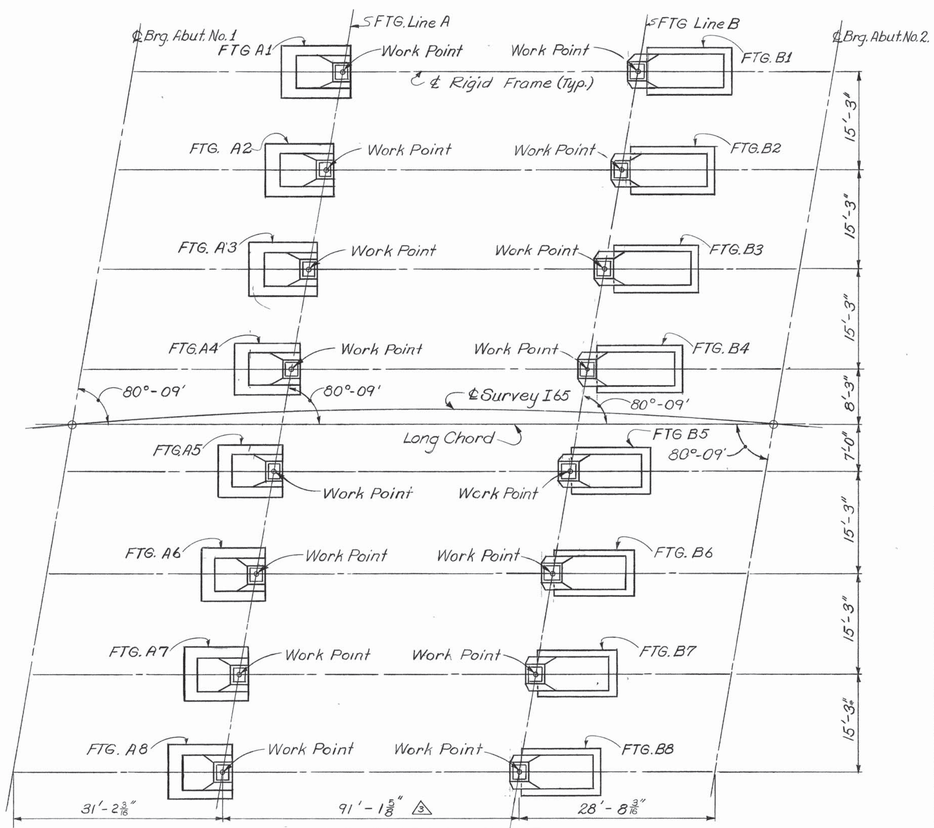

FRAME FOOTING LAYOUT

* Field Bend these Bars
E.F. Denotes Each Face

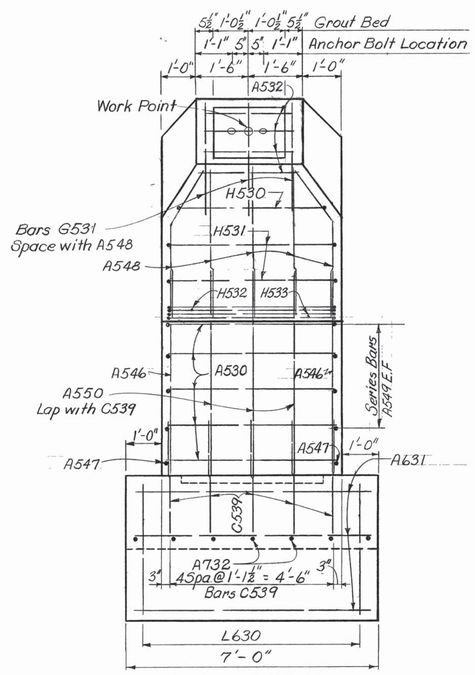

END ELEVATION

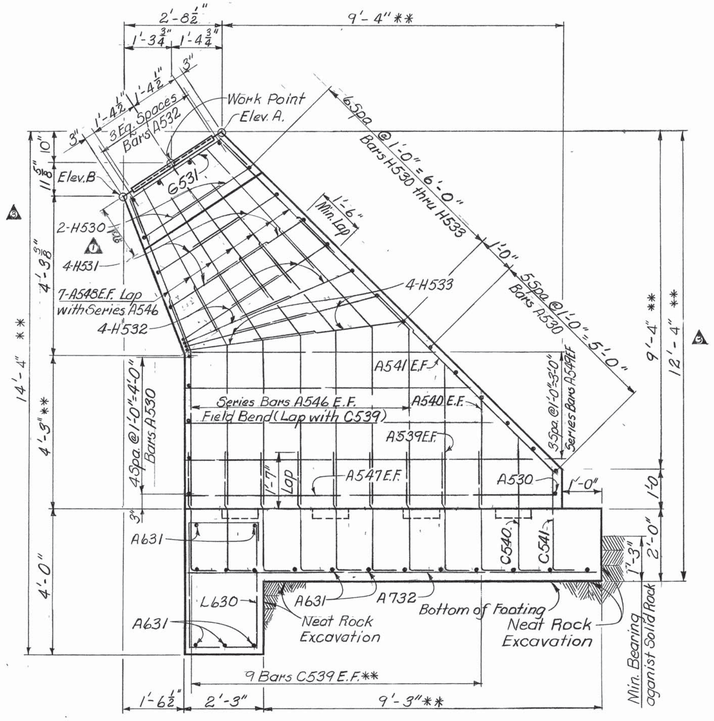

SIDE ELEVATION

NOTE: Series bars A546 and A549 form near and far face bars after cutting. See cutting diagram on Bill of Steel. Dwg. K-82-137.

DETAILS — FRAME FOOTINGS B5 THRU B8

**NOTE: Adjust footing elevations for B5 thru B8 by adjusting these dimensions equally for any individual footing and changing length of bars A547, A548 and A549.

⊛ Includes Grout Bed

△4 TABLE OF ELEVATIONS

Footing Number	Elevation A	Work Point Elevation	Elevation B	Bottom Ftg. Elevation
A1	500.34	499.51	498.54	492.01
A2	499.70	498.87	497.90	491.37
A3	499.06	498.23	497.26	490.73
A4	498.45	497.62	496.65	490.12
A5	498.46	497.63	496.66	490.13
A6	497.82	496.99	496.02	489.49
A7	497.18	496.35	495.38	488.85
A8	496.54	495.71	494.74	488.21
B1	500.05	499.22	498.25	485.72
B2	499.41	498.57	497.60	485.07
B3	498.76	497.93	496.95	484.43
B4	498.14	497.31	496.34	483.81
B5	498.15	497.32	496.35	485.82
B6	497.50	496.67	495.70	485.17
B7	496.86	496.03	495.06	484.53
B8	496.21	495.38	494.41	483.88

ESTIMATED QUANTITIES
—PER FOOTING—

Item	Concrete ⊛ Class A Cu. Yds.	Reinforcing Steel Lbs.
Frame Footing B5 thru B8	19.6	1221

STATE OF TENNESSEE
DEPARTMENT OF HIGHWAYS
NASHVILLE

FRAME FOOTING DETAILS

INTERSTATE 65 OVER WEDGEWOOD AVE.

STATION 591 + 50.98

DAVIDSON COUNTY

1970

APPROVED _____

K-82-136

DESIGNED BY	J.F.K.	DATE	11-68
DRAWN BY	E.J.W.	DATE	2-69
TRACED BY		DATE	
CHECKED BY	RFC	DATE	4-69

BRIGHTON ENGINEERING COMPANY

FED. ROAD DIST. NO.	STATE	FED. AID PROJ. NO.	FISCAL YEAR	SHEET NO.	TOTAL SHEETS
3	TENN	I-65-2(39)81	1970	168	345

BILL OF STEEL

1 R.M.D 5-25-70 Wingpost Revised

2 RMD 7/12/71 Added Reinf. Conc. Median Barrier

3 HMB 31-Aug-71 Rev. Bars U4 & Z4

1 ABUTMENTS

BAR	LOCATION	SIZE	NO. REQD. ABUT 1	NO. REQD. ABUT 2	BENDING DIMENSIONS a	b	c	d	LENGTH
A400	Wing Post	4	2	2					2'-10"
A401		4	4	4					3'-2"
A402		4	4	4					3'-5"
A403		4	4	4					3'-8"
A404		4	25	25					3'-9"
A405	Wing Post	4	12	12					9'-6"
A500	Cap	5	15	15					40'-3"
A501	Wing Cap	5	8	8					7'-0"
A502	Backwall	5	33	33					39'-9"
A503	Backwall	5	228	228					4'-1"
A504	Wings A&D	5	4	4					3'-2
A505	Wings A&D	5	22	22					4'-0"
A506	Wings	5	4	4					9'-6"
A507	Wings	5	8						10'-10"
A508	Wings B&C	5	4	4					3'-8"
A509	Wings B&C	5	22	22					4'-6"
A510	WING "B"	5	8						11'-7"
A511	WING "C"	5		8					11'-0"
A512	WING "D"	5		8					11'-5"
A700	CAP	7	10	10					43'-0"
A701	CAP	7	5	5					36'-3"
A702	WING CAP	7	16	16					7'-0"
A900	CAP	9	12	12					41'-3"
G400	WING POST	4	12	12	11'	11'	1'-8"	1'-5"	3'-6"
H500	CAP	5	130	129	0'-8"	3'-0"			6'-8"
H501	PVMT SEAT	5	114	113	1'-8"	0'-6"			2'-8"
L500	CAP	5	93	91	2'-5"	2'-2"	1'-0"		10'-2"
L501	WING CAP	5	10	10	2'-5"	2'-2"	1'-0"		9'-6"
V700	CAP	7	2		3'-0"	2'-11 3/8"	3'-0"	0'-4 11/16"	6'-0"
V701	CAP	7		2	3'-0"	2'-11 1/2"	3'-0"	0'-6"	6'-0"
W700	CAP	7	2		3'-0"	2'-11 3/8"	3'-0"	0'-4 11/16"	6'-0"
W701	CAP	7		2	3'-0"	2'-11 1/2"	3'-0"	0'-6"	6'-0"

FRAME FOOTINGS

BAR	LOCATION	SIZE	NO. REQD A1-A8	NO. REQD B1-B4	NO. REQD B5-B8	BENDING DIMENSIONS a	b	c	d	LENGTH
A530		5	88	48	48					4'-8"
A531		5	16							3'-8"
A532		5	32	16	16					2'-9"
A533		5	32							7'-2"
A534		5	16							6'-4"
A535		5	16							5'-4"
A536		5	16							4'-4"
A537		5	40							6'-3"
A538	(Series)	5		32		10'-6"	6'-6"	8	4	17'-0"
A539		5		8	8					4'-0"
A540		5		8	8					3'-0"
A541		5		8	8					7'-0"
A542		5		20						11'-2"
A543	(Series)	5		16		10'-8"	7'-7"	4	4	18'-3"
A544		5		88						6'-0"
A545		5		12						6'-6"
A546	(Series)	5			28	9'-3"	6'-0"	7	4	15'-3"
A547		5			20					10'-2"
A548		5			80					4'-6"
A549	(Series)	5			16	9'-9"	6'-9"	4	4	16'-6"
A550		5			12					6'-0"
B630		6	120							7'-8"
B631		6		72	68					6'-8"

FRAME FOOTINGS

BAR	LOCATION	SIZE	NO REQD A1-A8	NO REQD B1-B4	NO REQD B5-B8	BENDING DIMENSIONS a	b	c	d	LENGTH
A730		7	64							9'-2"
A731		7		28						12'-2"
A732		7			28					11'-2
C530		5	40			3'-7"				4'-4"
C531		5	16			4'-6"				5'-3"
C532		5	16			5'-5"				6'-2"
C533		5	16			6'-4"				7'-1"
C534		5	16			7'-3"				8'-0"
C535		5	16			7'-9"				8'-6"
C536		5	16			7'-1"				7'-10"
C537		5	16			6'-5"				7'-2"
C538		5	24			6'-2"				6'-11"
C539		5		92	84	3'-3"				4'-0"
C540		5		8	8	3'-7"				4'-4"
C541		5		20	20	2'-8"				3'-5"
G530		5	24			See Bending Diagram				6'-4"
G531		5		12	12	See Bending Diagram				6'-4"
H530		5		8	8	4'-3"	2'-5"			9'-1"
H531		5		16	16	4'-8"	3'-0"			10'-8"
H532		5		24	16	4'-8"	3'-5"			11'-6"
H533		5		16	16	4'-8"	3'-10"			12'-4"
H534		5		16		4'-8"	4'-5"			13'-6"
L630		6	88	36	36	1'-9"	0'-6"	3'-6"		11'-0"

SUPERSTRUCTURE 2

BAR	LOCATION	SIZE	NO. REQ'D	BENDING DIMENSIONS a	b	c	d	LENGTH
A680	Slab & Median B.	6	904					39'-6"
A681	Slab	6	1094					39'-9"
B680	Top of Slab	6	366	39'-9"				40'-5"
E680	Slab	6	730	16'-3"	11'-9"	0'-6"		39'-9"
K580	Slab & Med Barrier	5	183	0'-6"	0'-11"	1'-2"		4'-3"
	Reinf. Conc Median BARRIER 1							
A4	Median Barrier	4	20					38'-10"
U4	" "	4	92	2"	1'-0"	7"		2'-2"
Z4	" "	4	188	1'-3"	1'-1"			2'-10"

3

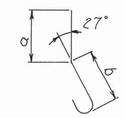

2 BARS Z4

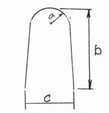

2 BARS U4

REINFORCING STEEL CODE

TYPE	SIZE	SERIES
A	5	00

NOTE. Dimensions on this sheet are outside to outside of bars

1 NOTE Bars A680 & K580 located in Median Barrier are listed in Superstructure BOS. & Quantities Quantities for Bars A4, U4 & Z4 are included in Item No 705-08.03. Reinf. Conc Median Barrier.

NOTE: Bars to be laid out in one layer. Adjacent trapezoids will form steel layers for each face of Pedestal for Frame Footing.

Dimension C = No. of bars in one series.
Dimension d = No. of Series Required.

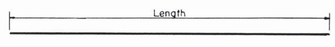

BARS A

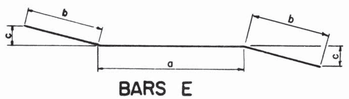

BARS E

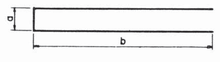

BARS H

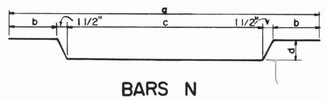

BARS N

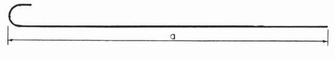

BARS B

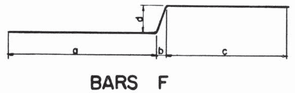

BARS F

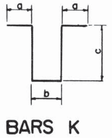

BARS K

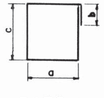

BARS L

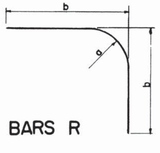

BARS R

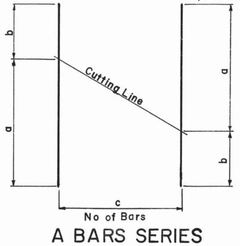

A BARS SERIES

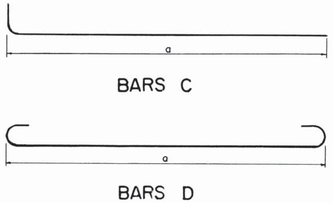

BARS C

BARS D

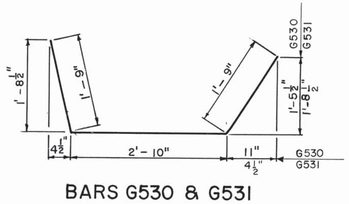

BARS G530 & G531

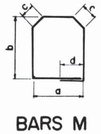

BARS M

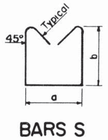

BARS S

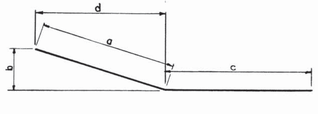

BARS V

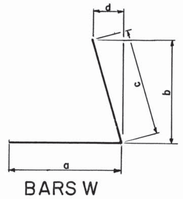

BARS W

DESIGNED BY _____ DATE _____
DRAWN BY E.J.W. DATE 3-69
TRACED BY _____ DATE _____
CHECKED BY RFC DATE 4-69

STATE OF TENNESSEE
DEPARTMENT OF HIGHWAYS
NASHVILLE

BILL OF STEEL

INTERSTATE 65 OVER WEDGEWOOD AVE.

STATION 591 + 50.98

DAVIDSON COUNTY

1970

APPROVED _____

K-82-137

BRIGHTON ENGINEERING COMPANY

FED ROAD DIST NO	STATE	FED AID PROJ NO	FISCAL YEAR	SHEET NO	TOTAL SHEETS
3	TENN	I-65-2(33)81	1970	143	345

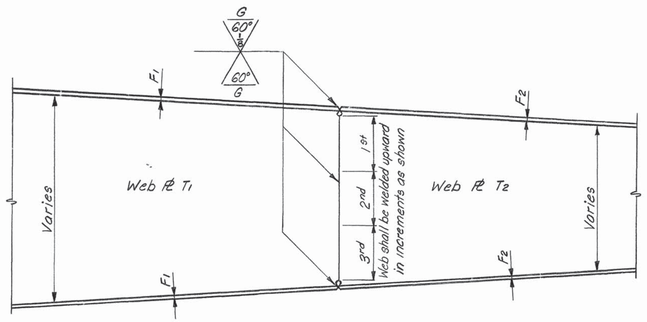

ELEVATION

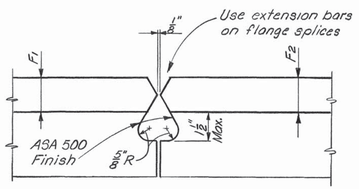

FLANGE SPLICE

Leave web cope holes open. Remove extension bars and grind welds to a smooth finish after completion and cooling.

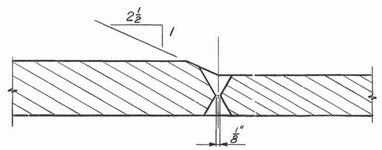

FLANGE SPLICE

(Grind to slope as shown)

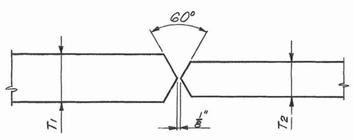

WEB SPLICE

EDGE PREPARATION

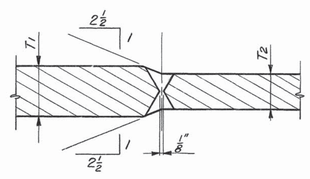

WEB SPLICE

(Grind to slope as shown)

COMPLETED WELD

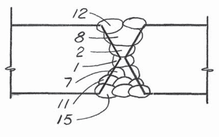

BOTTOM FLANGE

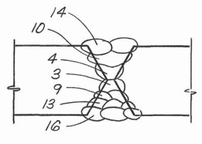

TOP FLANGE

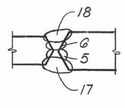

WEB

WELDING SEQUENCE

RADIOGRAPHIC INSPECTION OF GIRDER FIELD SPLICES: 100% of all flange butt welds and the top and bottom one-third (⅓) of web butt welds shall be radiographed. At the start of erection, no more than two splices shall be made prior to radiographic evaluation.
The full cost of all radiographs, including those to check defective work, will be borne by the contractor and shall be included in the price bid for Steel Structures.
This inspection shall be made by an independent commercial testing agency acceptable to the Highway Department.

WELDER SPECIFICATION: All welders shall be certified by an approved testing agency. Certification shall relate to the type of joint and type and size electrode. For girder splices the welder shall be certified in the vertical and overhead position tests.

FIELD ASSEMBLY: Splices shall be held with adjustable clamps so that proper horizontal and vertical fit-up can be made. Where guide bars and plates are required, they must be shown on the approved erection drawings. Plates must be removed after erection and girder surfaces ground smooth.

SHOP ASSEMBLY AND MARKING: Ends of girders to be welded shall be prepared in the shop taking into account their relative positions in the finished structure due to grade, camber and curvature. Each splice shall be completed, shop assembled, checked and match-marked while assembled by stamping the metal. The surfaces to be field welded shall not be painted but shall receive a light coat of linseed oil.

PROTECTION FROM MOISTURE: Welds must be protected from moisture from any source during welding and afterwards until parts welded have cooled to atmospheric temperature.

NOTE: The contractor may submit an alternate flange splice for approval in his welding procedure. This may be a single vee groove with a backing strip and extension bars. This type joint must be qualified for this project. Qualification tests shall be made by an independent agency acceptable to the Highway Department. Cost of these tests will be borne by the contractor and shall be included in the price bid for Steel Structures.

NOTE:
A balanced welding sequence should be followed similar to that shown at left. The number of passes shall be shown in the welding procedure along with the size of electrodes. A preheat of 300°F shall be maintained on the flanges while the surface passes are being made on the web. A complete welding procedure shall be submitted to the Engineer for approval. Low hydrogen electrodes shall be used.

STATE OF TENNESSEE
DEPARTMENT OF HIGHWAYS
NASHVILLE

FIELD WELDING DETAILS

INTERSTATE 65 STRUCTURES

DAVIDSON COUNTY
1970

DESIGNED BY _____ DATE _____
DRAWN BY W.R.T. DATE 2-26-69
TRACED BY _____ DATE _____
CHECKED BY J.F.K. DATE 2-26-69

APPROVED _____

K-82-116

BRIGHTON ENGINEERING COMPANY

Revised 6-12-70 by RMD. Added parapet Elev. and section C-C.

FED ROAD DIST NO	STATE	FED AID PROJ NO	FISCAL YEAR	SHEET NO	TOTAL SHEETS
3	TENN	I-65-2(83)81	1970	179-D	345

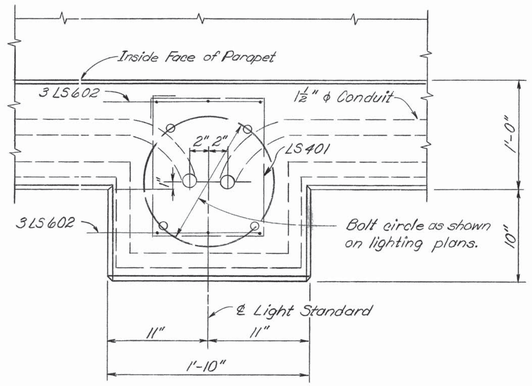

PLAN

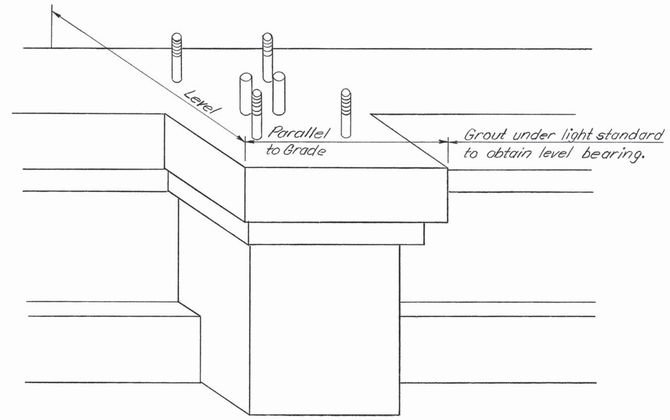

ISOMETRIC

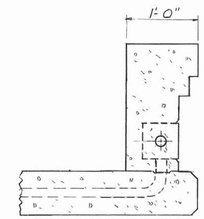

SECTION C-C

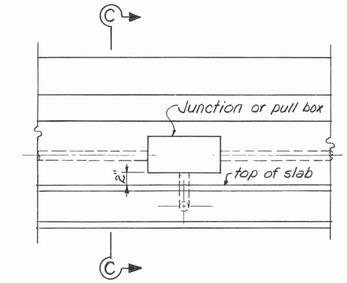

PARAPET ELEVATION
Showing electrical junction or pull boxes in parapet

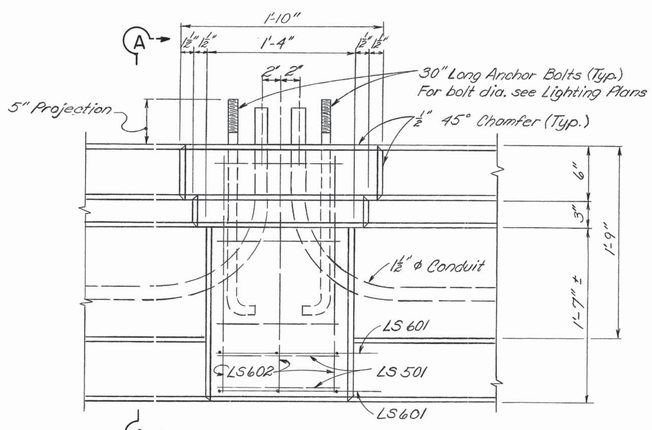

ELEVATION

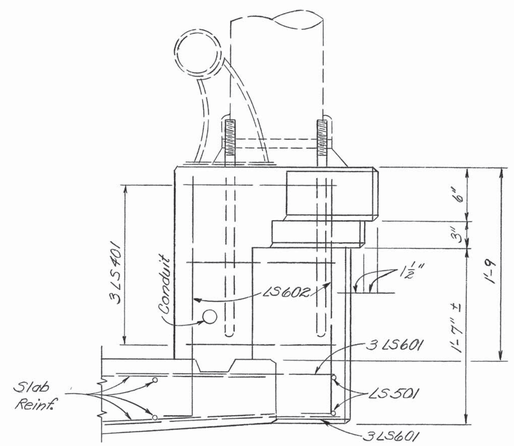

SECTION A-A

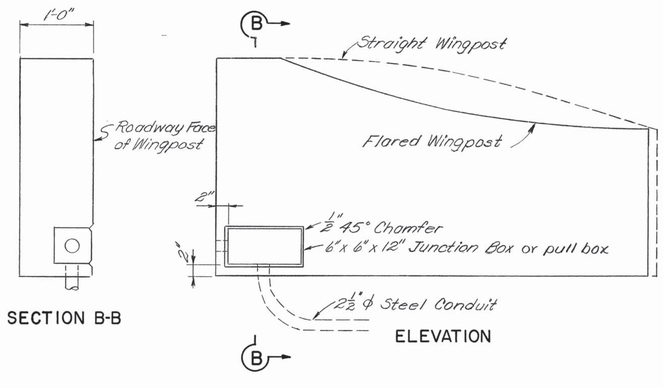

SECTION B-B

ELEVATION

DETAILS SHOWING ELECTRICAL JUNCTION BOX IN WINGPOST
See Bridge Layout sheet for location

ESTIMATED QUANTITIES FOR ONE LIGHT STANDARD BASE	
Class "A" Concrete – Cu. Yds.	Reinforcing Steel – Lbs.
0.10	85.20

Bar Details ①

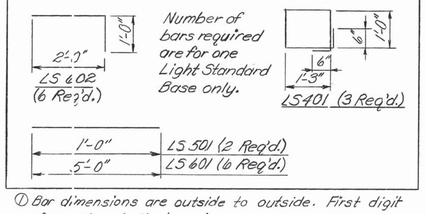

① Bar dimensions are outside to outside. First digit of number indicates size.

NOTES for LIGHT STANDARD BASE DETAILS

① See individual bridge plans for location of Light Standard Bases, if applicable.
② Cost of Light Standard Base including concrete and reinforcing steel to be included in the price bid for Bridge Railing.
③ For Bridge Railing see Tennessee Standard K-38-154 or K-38-154A where applicable.

STATE OF TENNESSEE
DEPARTMENT OF HIGHWAYS
NASHVILLE

LIGHT STANDARD BASE DETAILS
& ELECTRICAL JUNCTION BOX DETAILS

INTERSTATE 65 STRUCTURES

DAVIDSON COUNTY
1970

DESIGNED BY JCH DATE 2-68
DRAWN BY VAK DATE 4-70
TRACED BY DATE
CHECKED BY RFC DATE 4-68

LIGHT STANDARD BASE DETAILS

APPROVED

K-82-152

BRIGHTON ENGINEERING COMPANY

MICROFILMED

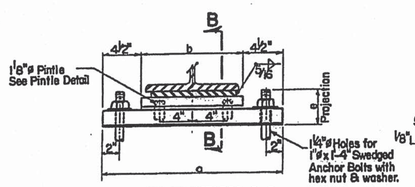

ELEVATION A-A

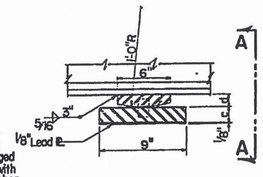

SECTION B-B

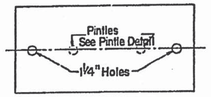

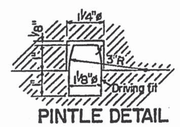

PINTLE DETAIL

STANDARD FIXED BEARING

TABLE OF DIMENSIONS & ESTIMATED QUANTITIES

Type	Dimensions					Structural Steel
	a	b	c	d	e	Lbs.
FL1	1'-9½"	1'-0½"	1¾"	1¾"	3½"	150
FL2	1'-11½"	1'-2½"	1¾"	1¾"	3½"	167

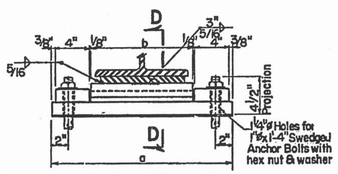

ELEVATION C-C

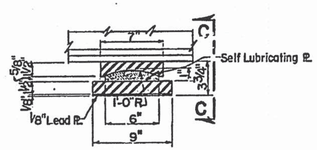

NOTE: Surfaces of the Steel ℞s opposing Self Lubricating ℞s to be given a plain machined finish, approx. 125 Microinch RMS. No paint or grease shall be on these surfaces or on the surfaces of the Expansion ℞. At the time of assembly these surfaces of the Steel ℞s shall be coated with a Lubricant furnished by the manufacturer of the Expansion ℞.

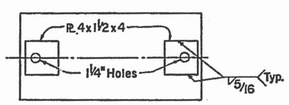

STANDARD EXPANSION BEARING

TABLE OF DIMENSIONS & ESTIMATED QUANTITIES

Type	Dimension		Structural Steel	Bronze*
	a	b	Lbs.	Lbs.
EL1	1'-9½"	1'-0½"	148	19
EL2	1'-11½"	1'-2½"	164	22

*See Special Provisions Regarding Self Lubricating Bronze Bearing Plates.

Revised 5-6-61

DESIGNED BY _____ DATE _____
DRAWN BY _____ DATE _____
TRACED BY _____ DATE 6-9-61
CHECKED BY _____ DATE _____

FED. ROAD DIST. NO.	STATE	FED. AID PROJ. NO.	FISCAL YEAR	SHEET NO.	TOTAL SHEETS
3	TENN.		19		

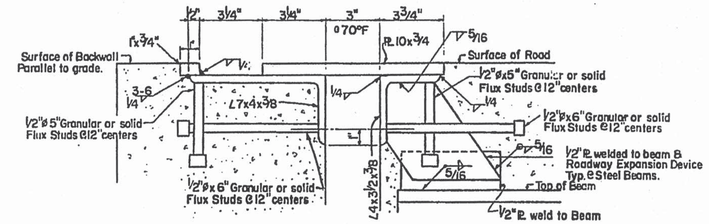

ROADWAY EXPANSION DEVICE TYPE A

SECTION AT RT. ANGLE TO JOINT

NOTE: Fabricate to fit slope of Roadway and skew of Bridge as required.
NOTE: See also Abutment drawings.

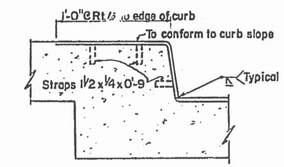

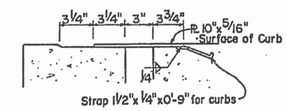

DETAIL OF CURB EXPANSION DEVICES

Required one at each end of roadway expansion device.

NOTE: STRUCTURAL STEEL CONFORMING TO ASTM A-7 OR ASTM A-36-62T WILL BE ACCEPTABLE.

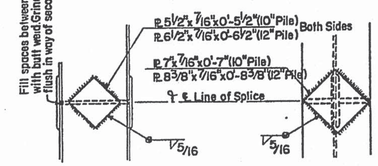

STANDARD PILE SPLICE DETAIL

STATE OF TENNESSEE
DEPARTMENT OF HIGHWAYS
NASHVILLE

STANDARD STEEL BRIDGE DETAILS
BEARING DEVICES
ROADWAY EXPANSION DEVICE
PILE SPLICE
1961

CORRECT Fred Graves
BRIDGE ENGINEER
APPROVED E W Zang
STATE HIGHWAY ENGINEER

H-5-146

2 copies.

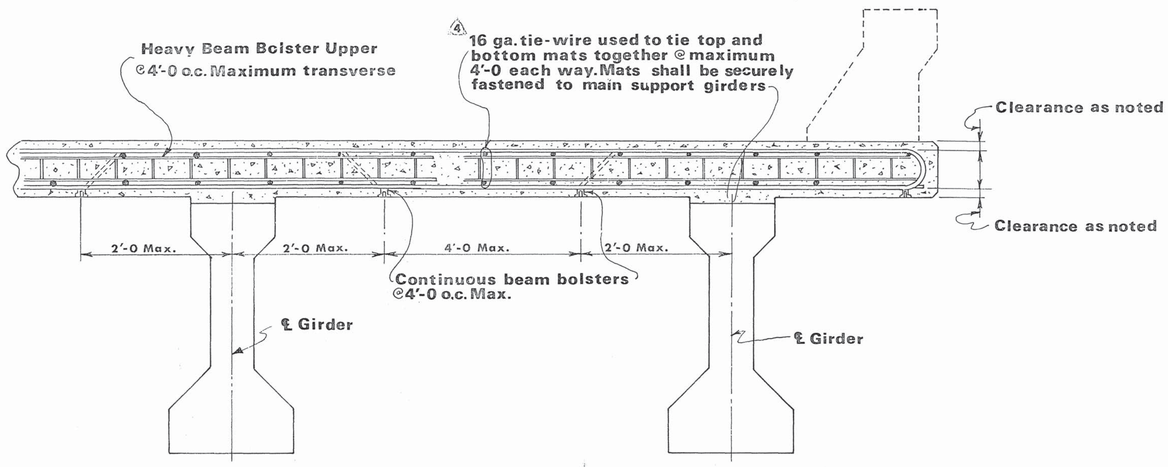

TYPICAL DETAILS FOR GIRDER TYPE BRIDGES

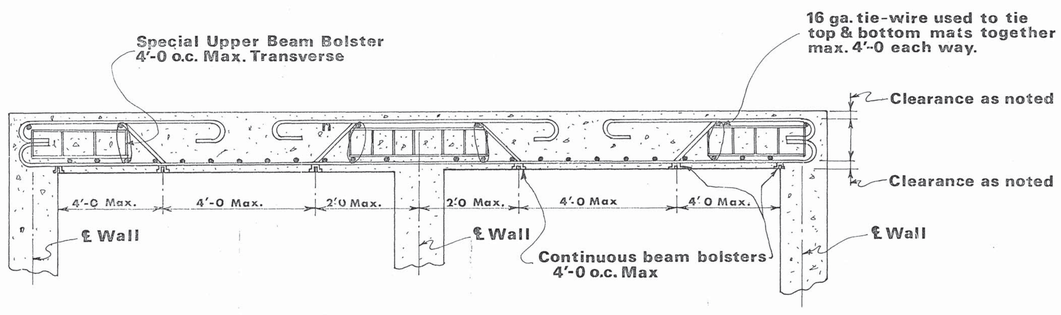

TYPICAL DETAILS FOR BOX TYPE STRUCTURES

△4 TABLE A

Ba Size	Approx dia. outside deformations (inches)
#3	7/16
#4	9/16
#5	11/16
#6	7/8
#7	1

△5 TABLE B

Bar Size	Approx dia. outside deformations (inches)
8	$1\frac{1}{8}$
9	$1\frac{1}{4}$
10	$1\frac{7}{16}$
11	$1\frac{5}{8}$
14	$1\frac{7}{8}$
13	$2\frac{1}{2}$

PROJECT NO.	YEAR	SHEET NO.

REVISIONS

NO.	DATE	BY	BRIEF DESCRIPTION
1	10-13-59		Reinf bar clearance
2	6-16-70		Gen. Revisions
3	9-12-74		Note 3 Changed
4	1 14-75		Revised Note
5	8-27-76		Revised Note #10 & added TABLE A & B, added note 13.

1. Reinforcement in Bridge slabs and top slabs of boxes shall be securely spaced from the forms by metal spacers as indicated this sheet. Other type spacers will not be permitted.

2. All beam bolsters (BB) & heavy beam bolster upper (HBBU) and Special Upper Beam bolster shall be made according to C.R.S.I. Specifications.

*3. Beam bolster (BB) legs in contact with forms and to be at exposed surface of concrete, shall be either "plastic protected" or "stainless steel protected"

4. Reinforcing bars shall be securely fastened together at each intersection using a minimum 16 ga. tie wire, except where spacing is less than one foot in each direction, alternate intersections shall be fastened.

5. Reinforcing bar supports shall be furnished to minus $\frac{1}{16}$" or plus $\frac{1}{8}$" of specified bar.

6. The top and bottom reinforcing mats shall be tied together at maximum of 4'-0 o.c. each way.

7. When any type shear connector protrudes from the top flange of the beam, the reinforcing steel shall be tied to these connectors at maximum 2'-0 o.c. along the beam.

8. Reinforcing steel shall not be used to support concrete buggies, material carts, or bundles of re-bars.

9. Cost of all bar supports and tie wire shall be included in bid price for reinforcing steel.

△1 10. A reinforcing bar may be substituted when a heavy Beam Bolster Upper of a 1" or less height is required. See Table A above.

11. A special Upper Beam Bolster (as detailed this sheet) may be substituted for heavy Beam Bolster Uppers required in heights of $5\frac{1}{4}$" or greater.

12. Steel in top & bottom of slabs of Reinforced Concrete Hollow Box Girders will be supported in accordance with this drawing.

*3a. Plastic protected legs shall be dipped and baked onto the upturned legs per the latest C.R.S.I. specifications.

*3b. Stainless protected legs shall be made from stainless steel with a minimum chromium content of 16% (similar to AISI TYPE 430). Per the latest C.R.S.I. specifications.

△5 13. Use table A and/or B for bar sizes to determine beam bolster size to use.

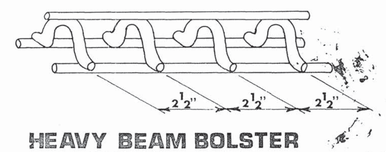

HEAVY BEAM BOLSTER UPPER (HBBU)

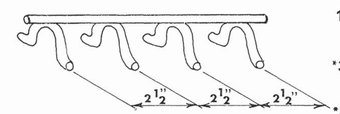

BEAM BOLSTER (B B)

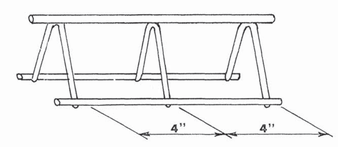

SPECIAL UPPER BEAM BOLSTER

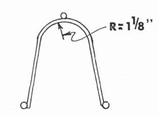

END VIEW

STATE OF TENNESSEE
DEPARTMENT OF TRANSPORTATION
BUREAU OF HIGHWAYS

STANDARD REINFORCING BAR SUPPORT DETAILS FOR CONCRETE SLABS

CORRECT H. W. Lewis
ENGINEER OF STRUCTURES

APPROVED Lewis Evans
DIRECTOR OF HIGHWAYS

K-80-14

DESIGNED BY _____ DATE _____
DRAWN BY G.P. Mullican DATE 8-29-73
SUPERVISED BY _____ DATE _____
CHECKED BY _____ DATE _____